Transmitter/Controller

for pH-Value, Redox, Standard signals and Temperature

measuring • monitoring • analysing

APM-1
Compact-Line





- Measuring range:
  pH: -2 ... 16
  Redox: -1500 ... +1500 mV
  Temperature: Pt100 / Pt1000: -50 ... +250 °C
  NTC/PTC: 0.1 ... 30 kΩ
  Standard signal: 0(4) ... 20 mA, 0 - 10 V
  Resistance: min. 100 Ω, max. 3 kΩ
- Input (standard)
  1 x pH or redox and
  1 x temperature/resistance or standard signal and
  2 x binary inputs
- Output (standard)
  2 x relay (changeover contact)
  1 x power supply for 2-wire sensor 17 V_{DC}
- 3 plug-in boards (optional retrofit)
  - relay (changeover contact)
  - double relay (2 x NO, common pin)
  - 1 x analogue output 0(4) ... 20 mA, 0(2) ... 10 V
  - interface RS 485
- Freely programmable via keys or by optional software
- Programmable backlight graphic display (1, 2 or 3 display values, trend display, bargraph, trend curve)
- Calibration routines, wash timer
- Math and logic module
- 13 operator languages integrated

A1

KOBOLD companies worldwide:

AUSTRALIA, AUSTRIA, BELGIUM, BULGARIA, CANADA, CHINA, CZECHIA, FRANCE, GERMANY, GREAT BRITAIN, HUNGARY, INDIA, INDONESIA, ITALY, MALAYSIA, MEXICO, NETHERLANDS, PERU, POLAND, REPUBLIC OF KOREA, SPAIN, SWITZERLAND, THAILAND, TUNISIA, TURKEY, USA, VIETNAM

KOBOLD Messring GmbH
Nordring 22-24
D-65719 Hofheim/Ts.
Head Office:
+49(0)6192 299-0
+49(0)6192 23398
info.de@kobold.com
www.kobold.com

Description

The compact transmitter /controller APM-1.. measures and controls the pH value or redox potential in aqueous solutions. It is available as panel-mounted device according to DIN/EN 61554 or as field housing.

Measured values and parameters are displayed on a high-contrast graphic display in plain text.

Easy configuration via buttons or PC with optional software provide a simple and user friendly operation.

An integrated math and logic module enables the integration of the measured values in mathematical formulas so that the measured variables can be displayed.

The transmitter has two analogue and two binary inputs.

- Analogue input:
  For pH- or redox sensor
  Conventional glass sensors, combined electrode or ISFET sensors can be attached.
- Compensation input:
  For connection of a
  resistance thermometer Pt 100 / Pt1000 / NTC / PTC
  a standard signal 0(4) ... 20 mA, 0(2) ... 10 V) or
  resistance transmitter (min. 100 Ω, max. 3 kΩ)
- 2 binary inputs
  As initiators for actions (keyboard inhibit, Hold, Alarm suppression, reset partial or total quantity, parameter set changeover) or connecting a pulse encoder e. g. for flow measurement (instantaneous value, partial quantity, total quantity)

The two control relays can be used as limit value or two position, three position, three position controller or continuous controller with P-, PI-, PD- or PID action.

The modular units can be retrofitted with 3 plug-in boards and so be upgraded flexibly for different measuring and control tasks

The followings boards are available:

- analogue output 0(4) ... 20 mA, 0(2) ... 10 V
- 1 relay (changeover contact)
- 2 relay (NO with common pin)
- interface RS 485 (max. 1)

A complete measuring device comprises:

- the pH transmitter model APM-1
- a pH combined electrode model APS-Z with integrated or separate temperature sensor Pt 100 model AZT-Z
- a suitable pH measuring cable model APK-Z

Application examples for pH measurements

Drinking water

- Monitoring parameters

Industrial waste-water treatment

- Neutralization
- Detoxication
- Precipitation station
- Final inspection

Communal waste-water treatment plants

- Inflow /sand-trap
- Activation tanks (for nitrification)
- Run-off
- Digestion tower

Functional description

The parameters of the units can be easily configured via keyboard or optional software via PC. The operation is protected by a password. Up to 8 user data that must be changed frequently, can be unblocked in one user file.

Display

The display is a graphic display in plain text. Different displays can be configurated by customer. Large display, double display, bargarph, trend curve with various status indicators and alarms.

Normal display

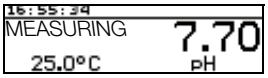

Large display

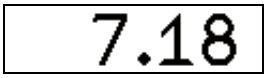

Trend display

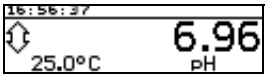

Bargraph

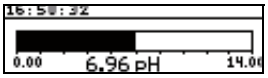

Trend curve (Data monitor)



Flow

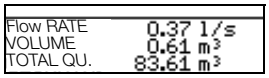

No responsibility taken for errors;
subject to change without prior notice.

1/11 - 2026

Calibration
For units with additional plug-in boards the following calibration options are possible:
Zero point, limit value, zero point and limit value, cell constant, temperature coefficient.

Linear scaling
With function "linear scaling" the input signal can be displayed linearly. The following units are available: µS/cm, mS/cm, %, mV, pH, ppm, customised up to 5 characters.

Customised with table
Nonlinear relationships between input and output size can be processed. E. g. Content of horizontal cylinders in level measurement. The values can be stored in a table via software.

Calibration
1, 2 or 3-point calibration for pH and 1-point calibration for Redox (for display mV) or 2-point calibration for Redox (%-display, free scaling).
The last 5 successful calibrations can be stored in a logbook.

Wash timer
Cyclically recurring actions can be triggered by activation of a relay.

Technical Data

General

Housing:		Plastic, for panel mounting according to DIN IEC 61554 or aluminum field housing, orange
Ambient temperature:		-5 ... +55 °C (panel mounting) -5 ... +50 °C (field housing)
Storage temperature:		-30 ... +70 °C
Climatic rating:		rel. humidity ≤ 90 % annual mean, no condensation
Mounting position:		horizontal
Weight:	Installation housing:	approx. 380 g (fully fitted with 3 optional boards)
	Field housing:	approx. 1780 g
Protection:		Installation housing: IP 65 (front), IP 20 (rear) Field housing: IP 65
Display:		LC graphic display, 122 x 32 Pixel blue with backlight
Power supply:		110 ... 240 V_{AC}, -15/+10 %, 48 ... 63 Hz (standard) 20 ... 30 $V_{AC/DC}$, 48 ... 63 Hz (special)
Power consumption :		max. 13 VA
Data backup:		EEPROM
Electrican connection:		screw terminals (rear) max. cable cross-section 2.5 mm²
Menu languages:		German (factory set), English, French, Spanish, Dutch, Russian, Hungarian, Italian, Czech, Swedish, Portuguese, Polish, Rumanian

Input 1 (standard)
(pH or Redox)

pH-value

Measuring and control range:	-2 ... 16 pH
Accuracy:	≤ 0.3 % of measuring range
Temperature effect:	0.2 % /10 K
Ambient temperature effect:	-10 ... +150 °C (note values of the sensor)

Redox potential

Measuring and control range:	-1500 ... 1500 mV
Accuracy:	≤ 0.3 % of measuring range
Ambient temperature effect:	0.2 % / 10 K

Input 2 (standard)
(Temperature, standard signal or resistance)

Temperature Pt100 / Pt1000

Measuring and control range:	-50 ... +250 °C (switchable to °F)
Accuracy:	≤ 0.25 % of measuring range
Ambient temperature effect:	0.2 % /10 K

Temperature NTC/PTC

Measuring and control range:	0.1 ... 30 kΩ (entry via table with 20 value pairs)
Accuracy:	≤ 1.5 % of measuring range
Ambient temperature effect:	0.2 % /10 K

Standard signal

Measuring and control range:	0(4) ... 20 mA or 0 ... 10 V
Accuracy:	0.25 % of measuring range
Ambient temperature effect:	0.2 % /10 K

Resistance transmitter

Measuring and control range:	minimal: 100 Ω, maximal 3 kΩ
Accuracy:	± 5 Ω
Ambient temperature effect:	0.1 % /10 K

Binary inputs (standard)

Activation:	Floating contact is open: function is not active Floating contact is closed: function is active
Function:	Key lock, manual mode, HOLD, HOLD inverse, alarm suppression, freeze measured value, level lock, reset partial quantity, reset total quantity, parameter set changeover

No responsibility taken for errors;
subject to change without prior notice.

Technical Data (suite)

Outputs (standard)

2 relay (changeover contact)

Contact rating:	5 A at 240 V_{AC} resistive load
Contact service life:	350 000 operations at nominal load 750 000 operations at 1 A

Sensor supply for 2-wire transmitter

17 V_{DC} at 20 mA, open-circuit voltage approx. 25 V_{DC}

Controller (standard)

(see manual for configuration examples)

Controller type:	Limit comparators, limit controllers, pulse length controllers, pulse frequency controllers, modulating controllers, continuous controllers
Controller structure:	P / PI / PD / PID

Optional boards

To extend functionality the units can be retrofitted with up to 3 optional boards.

Outputs (optional max. 3)

Optional board 1 relay

Switching function:	changeover contact
Contact rating:	8 A at 240 V_{AC} resistive load
Contact service life:	100 000 operations at nominal load 350 000 operations at 3 A

Optional board double relay

Switching function:	NO with common pin
Contact rating:	3 A bei 240 V_{AC} resistive load
Contact service life:	350 000 operations at nominal load 900 000 operations at 1 A

Optional board analogue output

Measuring range:	0(2) ... 10 V, 0 (4) ... 20 mA
Load resistance:	R_{load} ≤ 500 Ω
Accuracy:	≤ 0,5 %

Interfaces / data logger (optional max. 1)

Optional board RS 422/ 485

Protocol:	Modbus, Modbus Integer
Baud rate:	9 600, 19 200, 38 400
Device address:	0 ... 255
Max. number of participants:	32

No responsibility taken for errors;
subject to change without prior notice.

1/11 - 2026

Order Details (Example: **APM-1 E 1 0 0 0 Y**)

Model	Version	Housing	Power supply	Option 1 (Optional board)	Option 2 (Optional board)	Option 3 (Optional board)	Special
APM Evaluation electronics pH/redox	**1** = Compact-Line (new) Input: 1x pH/redox, 1x temperature/ standard signal, 2x binary input sensor supply: 2-wire transmitter, 2 relays	**E** = for panel mounting **F** = Field housing **S** = Field housing with wall mounting bracket **R** = Field housing with pipe mounting bracket	**1** = 110...240 V_{AC} -15%/+10%, 48...63 Hz **2** = 20...30 $V_{AC/DC}$, 48...63 Hz	**4** = analogue output 0(4)-20 mA, 0(2)-10 V **(Standard)** **0** = without **2** = 1 relay (changeover contact) **3** = 2 relays (NO with common pin)	**0** = without **2** = 1 relay (changeover contact) **4** = analogue output 0(4)-20 mA, 0(2)-10 V	**0** = without **2** = 1 relay (changeover contact) **3** = 2 Relais (NO with common pin) **4** = analogue output 0(4)-20 mA, 0(2)-10 V **S** = Interface RS 422/485	**0** = without (factory set) **Y** = adjusted according to customer specification

[1] The readout of data is only possible with the PC setup software! Note: All languages are available in the device menu and can be changed by the customer at any time. The factory default setting of a language (except for "German") entail additional costs.

Accessories for transmitter APM-1 and ACM-1

Version	Code
Setup-Software	**ACM-Soft**
PC-Interface with transducer USB/TTL with adapter (pins/connector)	**ACM-Int**
Mounting bracket for top hat rail, front size (96 x 48 mm)	**ACM-Halt**

Electrical connection

(For details see manual or configuration sheet)

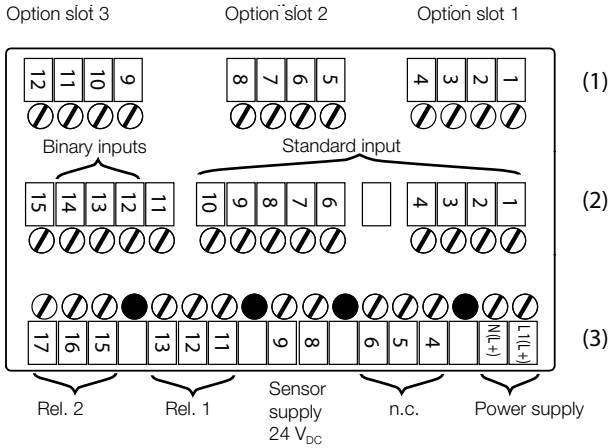

Dimensions

Panel Mounting

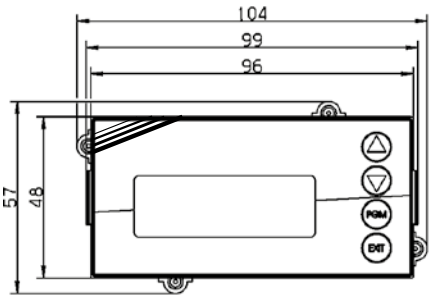

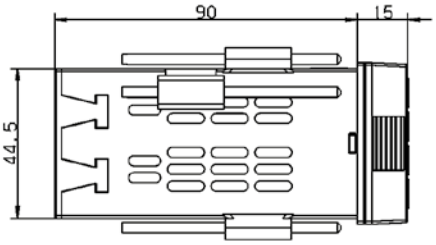

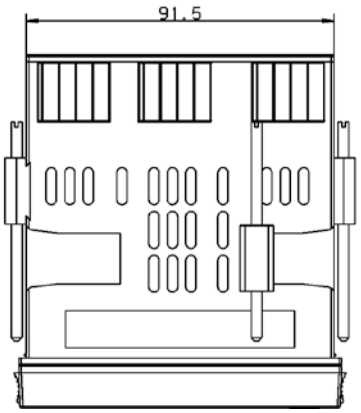

Panel cut-out

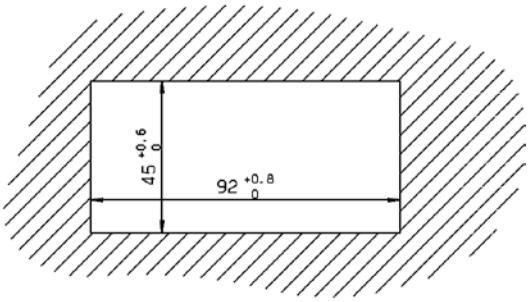

Field Housing

