Operating Instructions

for

KOBAR Pitot Tube

Model ANU

1. Contents

1. Contents 2
2. Note 3
3. Instrument Inspection 3
4. Description 3
5. Operation 4
6. Technical Specifications Limitations 4
7. KOBAR Pitot Tube components 6
   7.1 Threaded process connection 6
   7.2 Flanged process connection 7
8. Mounting Position 8
   8.1 Liquid flow in a horizontal pipe 8
   8.2 Gas flow in a horizontal pipe 9
   8.3 Steam flow in a horizontal pipe 10
   8.4 Liquid or Gas flow in a vertical pipe 10
   8.5 Steam flow in a vertical pipe 10
9. Drill the pipe hole 11
   9.1 Drill the sensor hole 11
   9.2 Drill a hole for opposite-side end support models 12
10. Weld the weld-neck flange 13
11. Upstream & Downstream lengths 14
12. Install the sensor assembly 15
   12.1 General instructions 15
   12.2 Mounting KOBAR Pitot Tube 15
13. Disposal 16
14. EU Declaration of Confirmity 17
15. UK Declaration of Conformity 18
16. Note 19

Manufactured by:

Kobold Mesura S.L.U
Avda. Conflent, 68 Nave 15
08915 Badalona
Tel.: +34 93 460 38 83
Fax: +34 93 460 38 76
E-Mail: info.es@kobold.com
Internet: www.kobold.com

Edición: May. 2023

2. Note

Please read these operating instructions before unpacking and putting the unit in operation. Follow the instructions precisely as described herein.
The instruction manuals on our website WWW.kobold.com are always for currently manufactured version of our products. Due to technical changes, the instruction manuals available online may not always correspond to the product version you have purchased. If you need an instruction manual that correspond to the purchased product version, you can request it from us free of charge by email (info.de@kobold.com) in PDF format, specifying the relevant invoice number and serial number. If you wish, the operating instructions can also be sent to you by post in paper form against an applicable postage fee.

The devices are only to be used, maintained, and serviced by persons familiar with these operating instructions and in accordance with local regulations applying to Health & Safety and prevention of accidents.

When used in machines, the measuring unit should be used only when the machines fulfil the EC-machine guidelines.

3. Instrument Inspection

Instruments are inspected before shipping and sent out in perfect condition.
Should damage to a device be visible, we recommend a thorough inspection of the delivery packaging. In case of damage, please inform your parcel service / forwarding agent immediately, since they are responsible for damages during transit.

Scope of delivery:
The standard delivery includes:
Flowmeter model: ANU-...

4. Description

KOBAR Pitot Tube ANU are used for economical and reliable flow measurement of liquids, gases or steam. During measurement, the medium should be in one pure phase and flow through pipes with circular cross-section running full.
The KOBAR Pitot Tube require little or no maintenance, as there are no moving parts in the measurement stream.
We adapt to customer needs.

5. Operation

Its operation is based on the measurement of the differential pressure between upstream and downstream, when the KOBAR Pitot Tube is installed on the line. The measurement is performed by a transmitter (PAD) connected to the pressure taps located upstream and downstream of the KOBAR Pitot Tube.

6. Technical Specifications Limitations

Exceeding the KOBAR Pitot Tube technical specifications limitations printed on the KOBAR Pitot Tube may cause the sensor to failure.

The KOBAR Pitot Tube produces an accurate and repeatable flow measurement under the following conditions:

• The maximum differential pressure, as printed on the KOBAR Pitot Tube, is not exceeded.

• The KOBAR Pitot Tube is not used for two-phase flow or for steam service below the saturation temperature.

Install the KOBAR Pitot Tube in the correct location within the piping branch to prevent measurement inaccuracies caused by flow disturbances.

KOBAR Pitot Tube installation allows a maximum misalignment of 3 degrees. Misalignment beyond 3 degrees will cause errors in flow measurement.

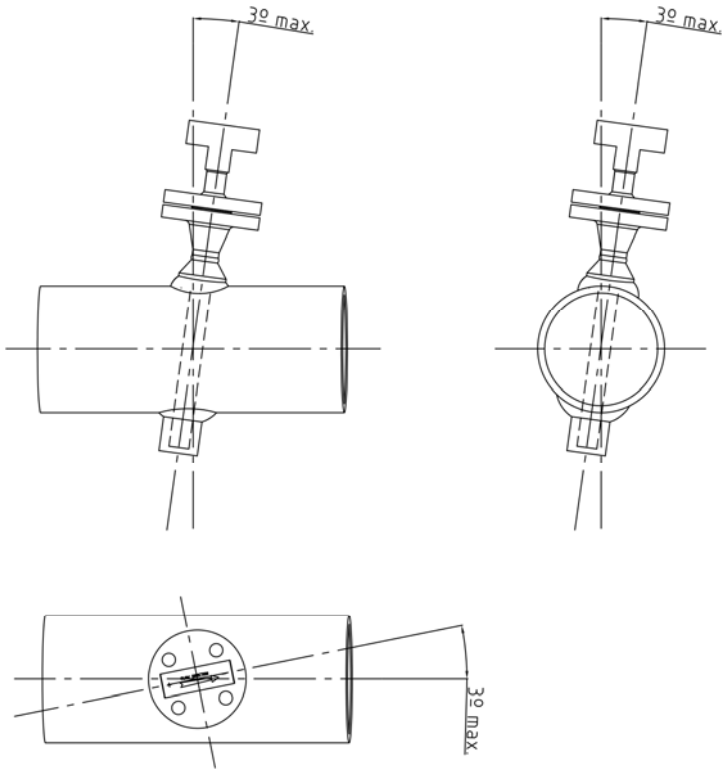

Use chapter 11 to determine the proper KOBAR Pitot Tube straight run requirements.
For gas service, multiply values from chapter 11 by 1.5.
Information contained in this manual applies to circular pipes only.
Straightening vanes may be used to reduce the required straight run length and will improve performance.
Row 6 in chapter 11 applies to gate, globe, plug, and other throttling valves that are partially opened. If a "through-type" valve will remain open, use the values shown in Row 5. Refer to Row 6 for the straight run requirements of a KOBAR Pitot Tube located downstream of the control valve.

7. KOBAR Pitot Tube components

7.1 Threaded process connection

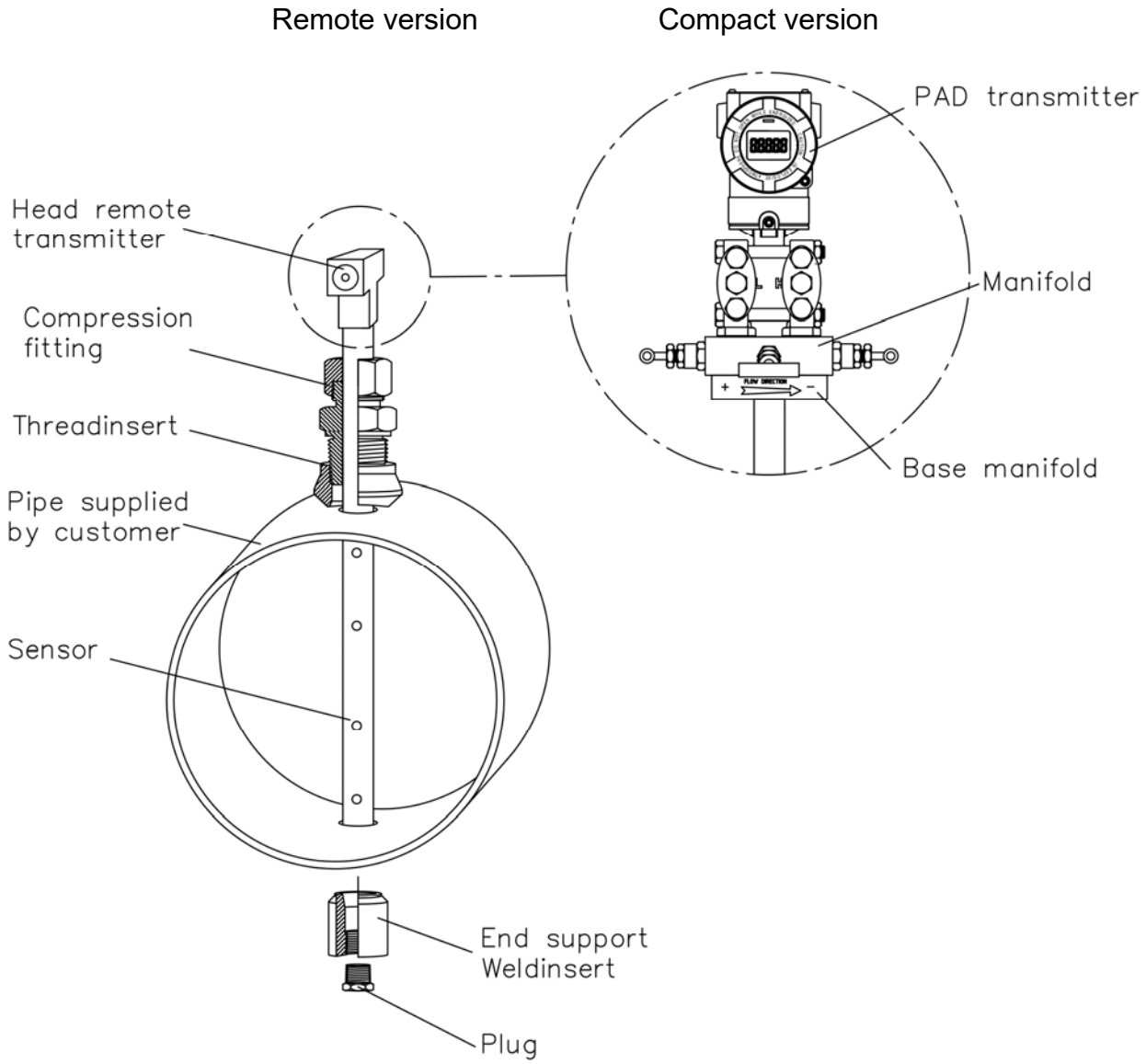

7.2 Flanged process connection

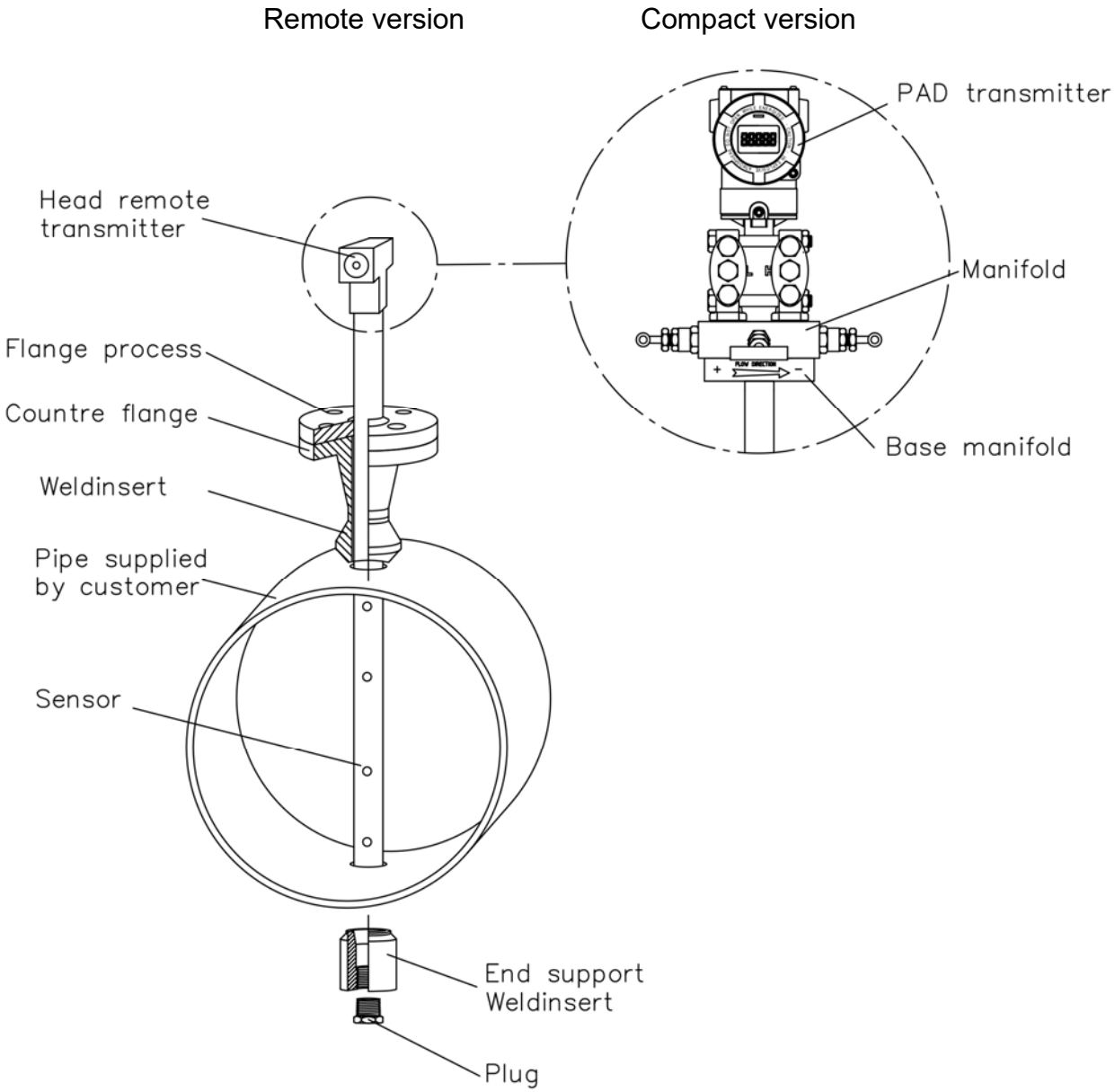

8. Mounting Position

8.1 Liquid flow in a horizontal pipe

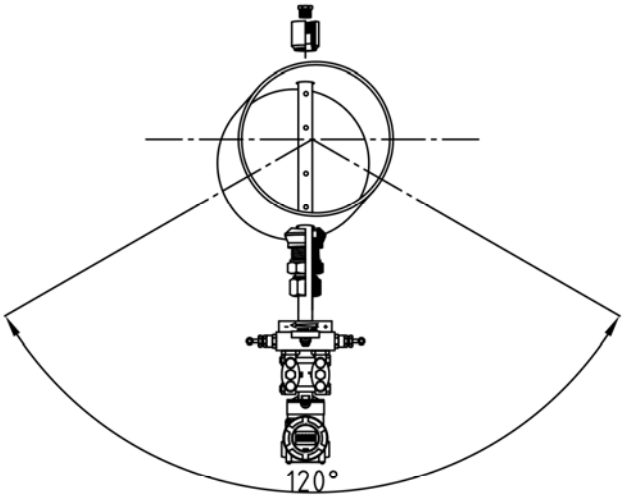

120° (Recomended Zone)

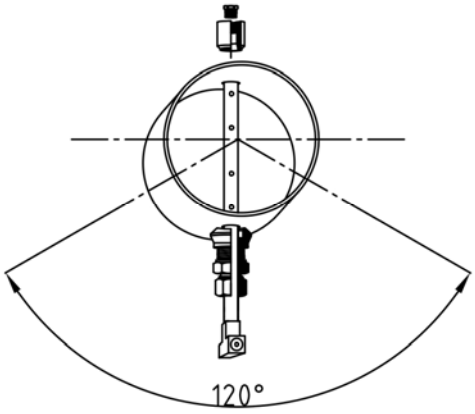

120° (Recomended Zone)

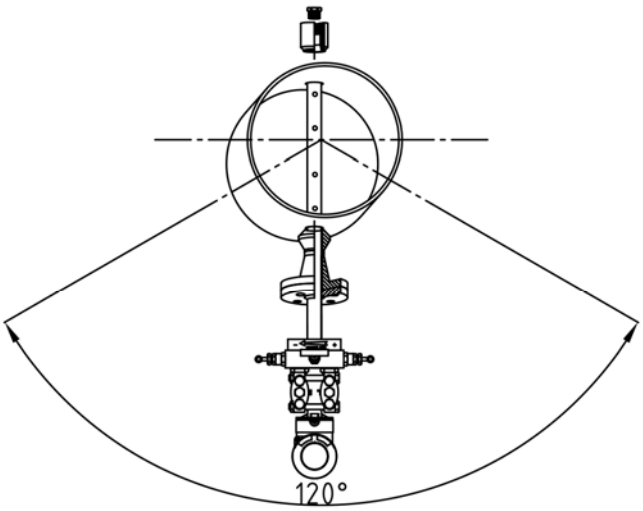

120° (Recomended Zone)

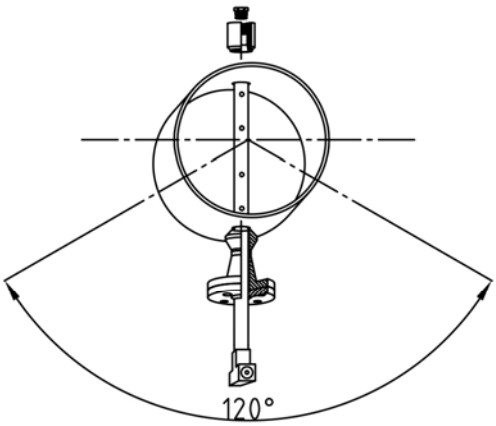

120° (Recomended Zone)

8.2 Gas flow in a horizontal pipe

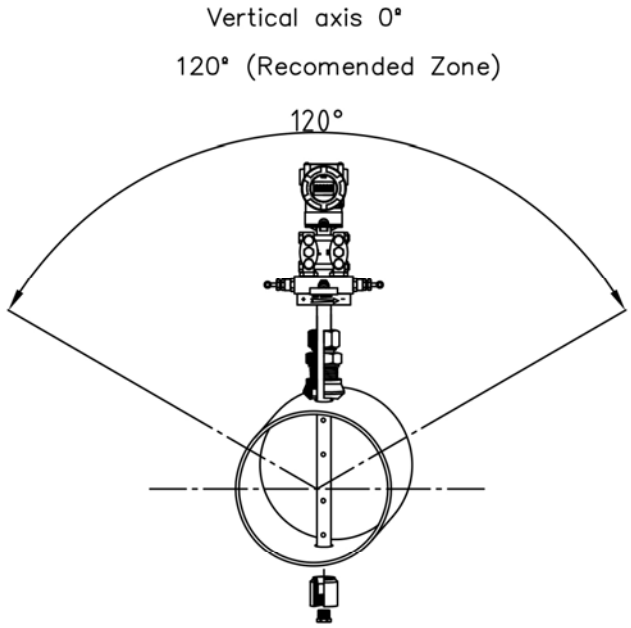

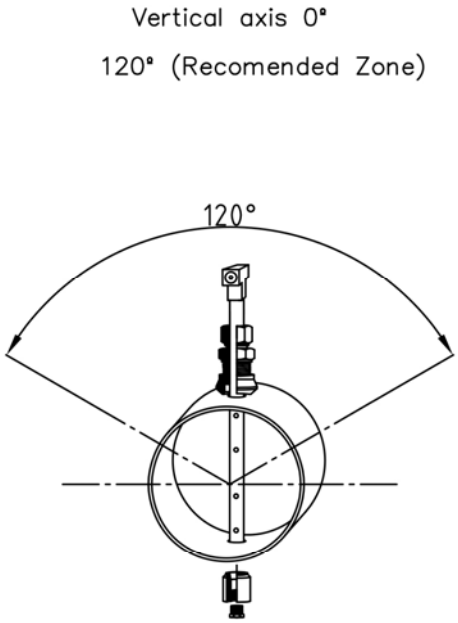

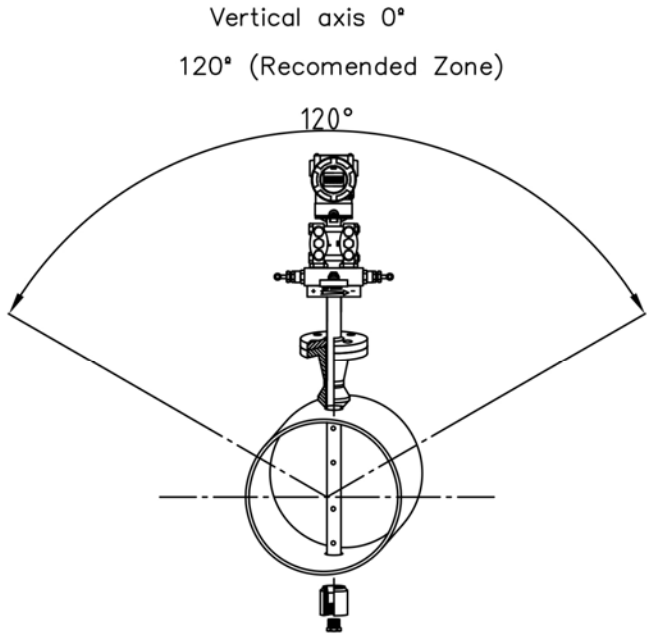

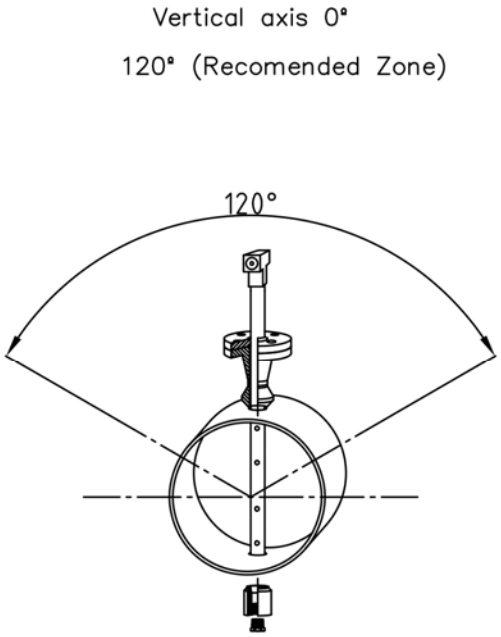

8.3 Steam flow in a horizontal pipe

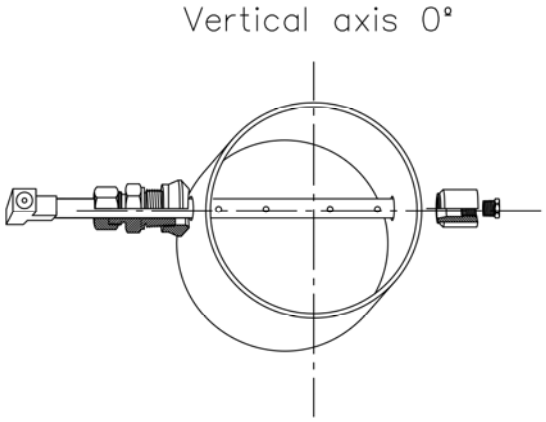

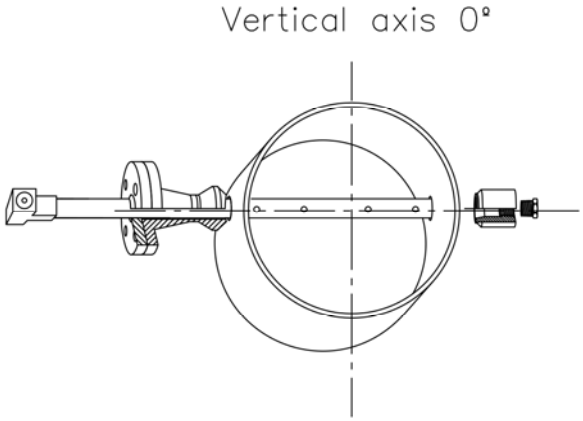

8.4 Liquid or Gas flow in a vertical pipe

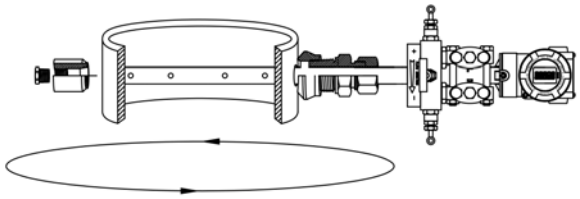

360° (Recomended Zone)

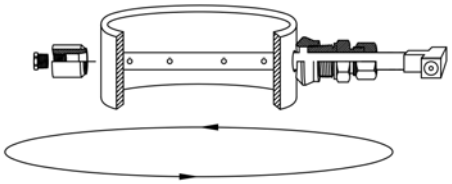

360° (Recomended Zone)

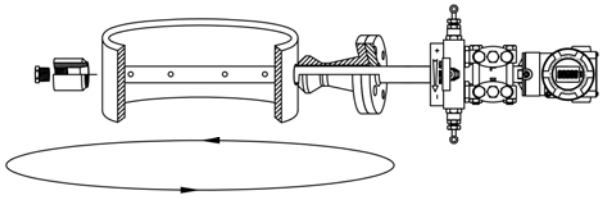

360° (Recomended Zone)

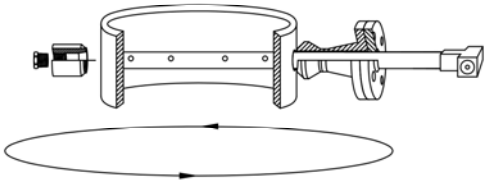

360° (Recomended Zone)

8.5 Steam flow in a vertical pipe

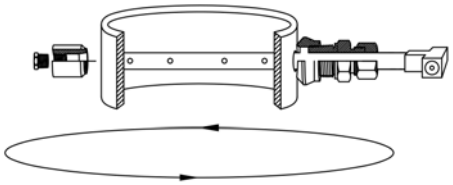

360° (Recomended Zone)

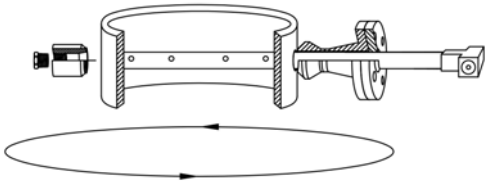

360° (Recomended Zone)

9. Drill the pipe hole

9.1 Drill the sensor hole

Follow the steps below to drill the hole in the pipe.

1. Depressurize and drain the pipe.

2. Select the location for the hole.

   Select a location anywhere around the circumference of the pipe for vertical pipes.
   For horizontal pipes, the hole location depends upon the service for which the KOBAR Pitot Tube is to be used:
   -Liquid: drill the hole along the bottom of the pipe
   -Gas: drill the hole along the top of the pipe.
   -Steam: drill the hole in the center of the pipe.

3. Determine the diameter of the hole to be drilled.

Drill (Dimensions in millimeter)	
Sensor	**Hole diameter**
Ø13 Ø25 Ø60	Ø15 Ø27 Ø62

Note: Drill the hole 180 degrees from the first hole for opposite-side end support models.

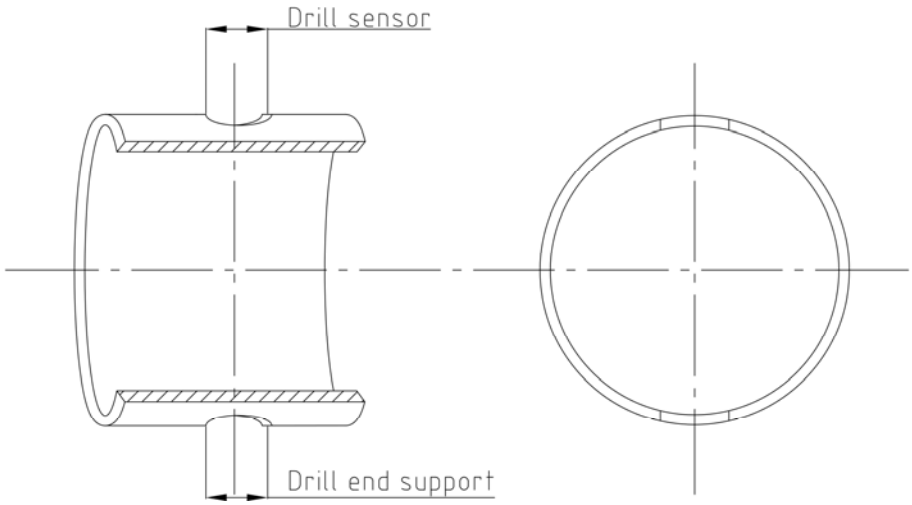

4. After the hole is drilled, remove burrs of the hole inside the pipe.

9.2 Drill a hole for opposite-side end support models

A second hole must be drilled for the opposite-side end support weld coupling if opposite-side end support is supplied. This hole must be of the same diameter as the first hole: place it directly opposite the first hole so that the sensor can pass completely through the pipe. Use the following steps to find the location for the second hole:

1. Wrap a piece of soft wire or string around the pipe to measure the pipe´s circumference.
2. Remove the wire or string and measure half of the circumference length
3. Re-wrap the half-length around the pipe from the center of the first hole.
4. Mark the center of what will become the second hole, as shown in figure
5. Deburr the drilled hole on the inside of the pipe.

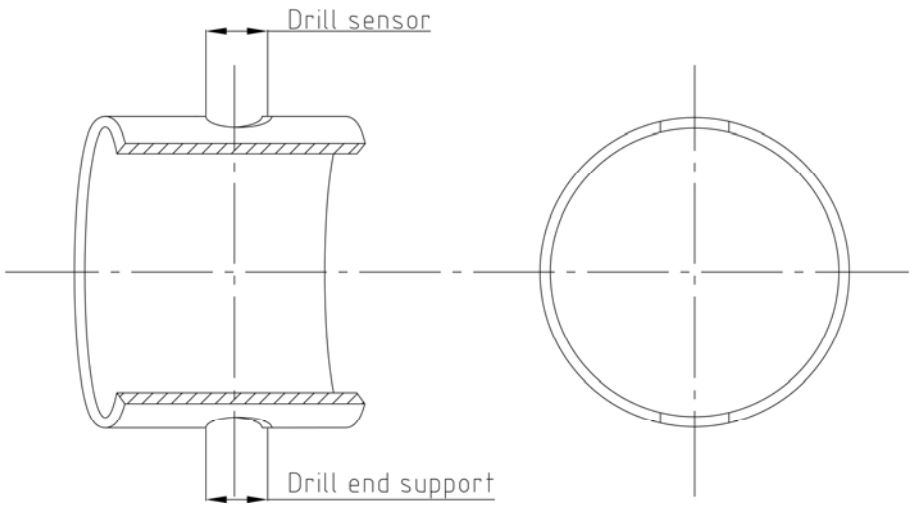

10. Weld the weld-neck flange

Weld the weld-neck flange and weldolet assembly to the pipe.

Protect the threads with plugs, or other accessories before welding.
This will protect the weld-fitting threads from weld splatter.

Use the KOBAR Pitot Tube for alignment and tack weld the weld-neck flange and weld fitting. Be sure to remove the KOBAR Pitot Tube before completing the welding. Straddle the flange bolt holes with the centerline of the pipe, as shown in figure 1.

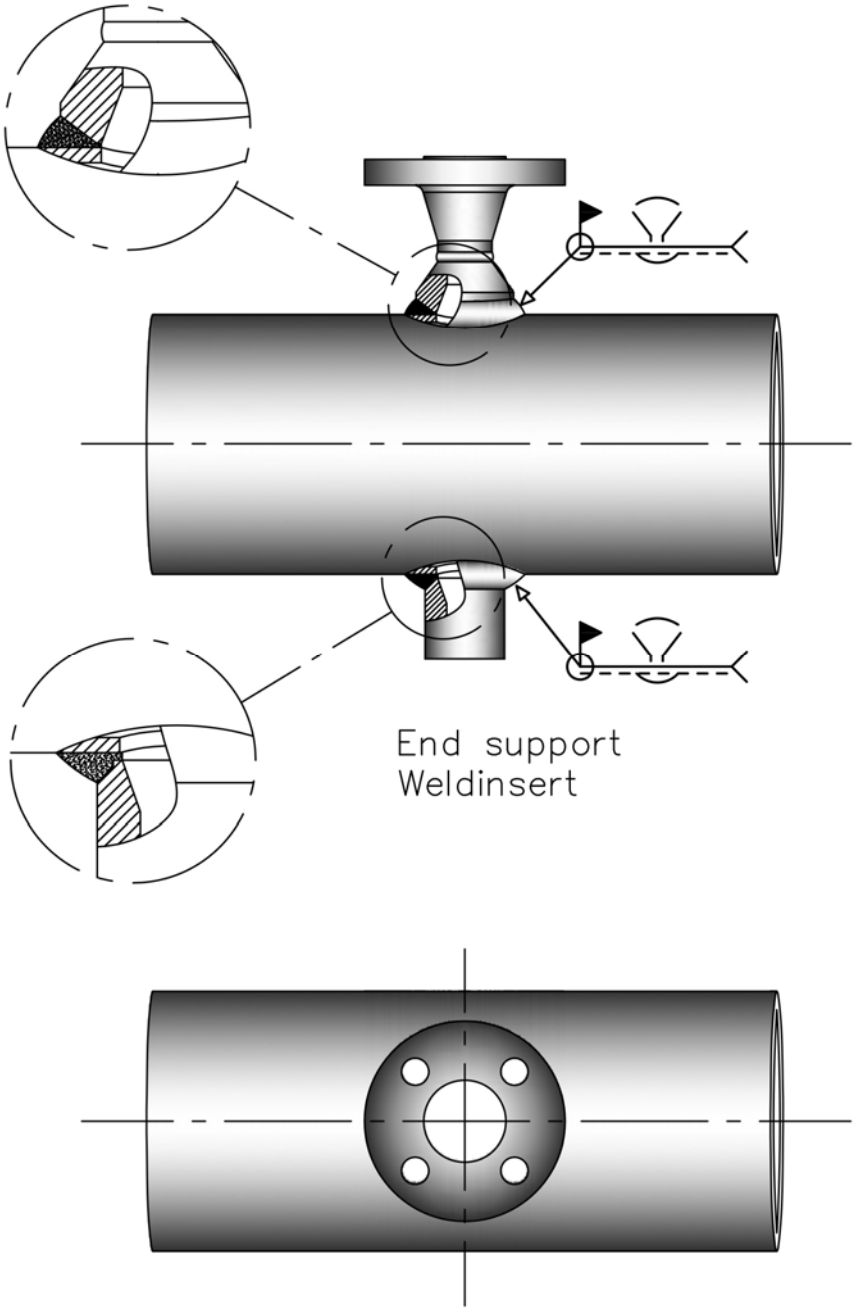

Figure 1

11. Upstream & Downstream lengths

Upstream & Downstream Lengths

	Upstream lengths					Downstream Lengths
	Without Vanes		With Vanes			B
	In plane A	Out of plane A	A[1]	C	C[1]	
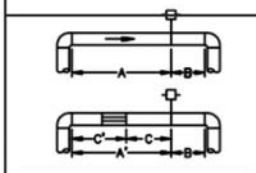	8 -	10 -	- 8	- 4	- 4	4 4
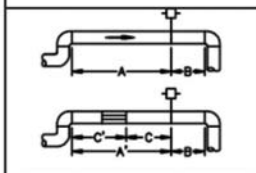	11 -	16 -	- 8	- 4	- 4	4 4
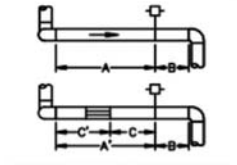	23 -	28 -	- 8	- 4	- 4	4 4
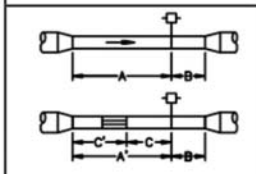	12 -	12 -	- 8	- 4	- 4	4 4
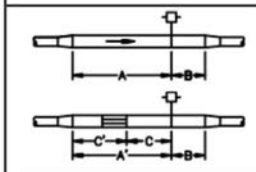	18 -	18 -	- 8	- 4	- 4	4 4
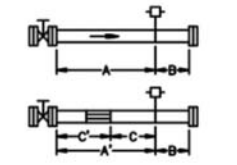	30 -	30 -	- 8	- 4	- 4	4 4

- If proper lengths of straight run are not available, position the mounting such that 80% of the run is upstream and 20% is downstream.
- "In Plane A" means the sensor is in the same plane as the elbow. "Out of Plane A" means the sensor is perpendicular to the plane of the elbow.
- The information contained in this manual is applicable to circular pipes only. Consult the factory for instructions regarding use in square or rectangular ducts.
- Straightening vanes may be used to reduce the required straight run length.

12. Install the sensor assembly

12.1 General instructions

1. Verify that flow operational data at the installation point matches with the flow calculations performed for the primary element to be installed at this point.

2. The straight run requirements should be met according to charter 10.

3. The pipe inner should be clean, free of seam, deposits and rust areas at least 10D upstream of the primary element and 4 D downstream (D is inner diameter).

4. The incoming-flow side is marked with “+”. The directional arrow on the differential pressure transducer shows the direction of flow.

5. The differential-pressure lines (+) or (-) have to be routed through the manifold valve block. The DP-Transmitter is mounted on the manifold valve block by means of the assembly material that is included with the delivery, when ordered.

6. The primary element is only permitted to be installed by trained personnel. The maintenance work and operational startup are to be carried out only by qualified personnel.

12.2 Mounting KOBAR Pitot Tube

A. Install the weld fitting sensor flange using the gasket, studs and nuts after the mounting hardware has cooled.

B. Tighten the nuts in a cross pattern.

C. Apply a thread sealant to the support plug.

D. Tighten the plug into the weld fitting.

E. Insert the KOBAR Pitot Tube into the weld fitting until the sensor tip contacts the pipe wall, or support plug.

   Note: If the KOBAR Pitot Tube appears to be too long, go back to step C. Verify that the weld fitting sensor flange was installed into the weld fitting before the KOBAR Pitot Tube was installed.

13. Disposal

Note!

- Avoid environmental damage caused by media-contaminated parts.
- Dispose of the device and packaging in an environmentally friendly manner
- Comply with applicable national and international disposal regulations and environmental regulations.

Batteries

Batteries containing pollutants are marked with a sign consisting of a crossed-out garbage can and the chemical symbol (Cd, Hg, Li or Pb) of the heavy metal that is decisive for the classification as containing pollutants:

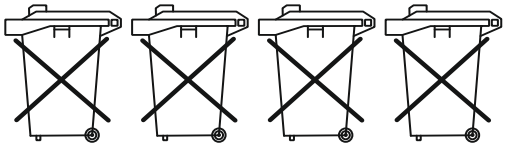

Cd[1] Hg[2] Pb[3] Li[4]

1. „Cd" stands for cadmium
2. „Hg" stands for mercury
3. „Pb" stands for lead
4. „Li" stands for lithium

Electrical and electronic equipment

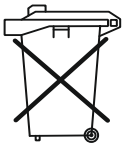

14. EU Declaration of Confirmity

DECLARACIÓN DE CONFORMIDAD EU

EU DECLARATION OF CONFORMity
EU-KONFOMITÄTSERKLÄRUNG
DÉCLARATION DE CONFORMITÉ EU
DICHIARAZIONE DI CONFORMITÀ EU

KOBOLD MESURA S.L.U.
Avda. Conflent, 68 08915 Badalona (España)

Declara, bajo la propia responsabilidad, que el producto
Declares under our sole responsibility, that the product
Erklärt in alleiniger Verantwortung, dass das produkt
Déclare sous sa seule responsabilité, que le produit
Dichiara sotto la propia responsabilità, che il prodotto

ANU

Normas armonizadas y documentos de la normativa aplicados:
Applied harmonised standards and normative documents:
Angewandte harmonisierte Normen oder normativer Dokumente:
Normes harmonisées et documents normatifs appliqués
Norme armonizzate e documenti normativi applicati:

EN10204:2004, ANSI B16.5, EN1092-1:2018, ASME IX, EN15614-1:2017

Fabricado en: **KOBOLD MESURA S.L.U Avda. Conflent, 68 08915 BADALONA (Spain**)
Made in:

Badalona, May 2023
DT0705

Gerente
Azzam Charmand

15. UK Declaration of Conformity

DECLARACIÓN DE CONFORMIDAD UK

UK DECLARATION OF CONFORMITY
UK-KONFOMITÄTSERKLÄRUNG
DÉCLARATION DE CONFORMITÉ UK
DICHIARAZIONE DI CONFORMITÀ UK

KOBOLD MESURA SLU
Avda. Conflent, 68 nave 15 08915 Badalona (España)

We Kobold Mesura S.L.U. declare under our sole responsibility that the product:

Flowmeter
ANU...

To which this declaration relates is in conformity with the standards noted below:

BS ISO 10204:2004
BS EN 1092-1
BS EN ISO 15614:2017

Badalona may 2023
DT0707

Gerente

16. Note

Kobold Mesura S.L.U
Avenida Conflent 68 Nave 15
08915 Badalona
Tel.: +34 93 460 38 83
Fax: +34 93 460 38 76
E-Mail: info.es@kobold.com
www.kobold.com

Technical data
Subject to change without prior notice