Bypass Level Indicators

plastic version

measuring • monitoring • analysing

MBK-16-17



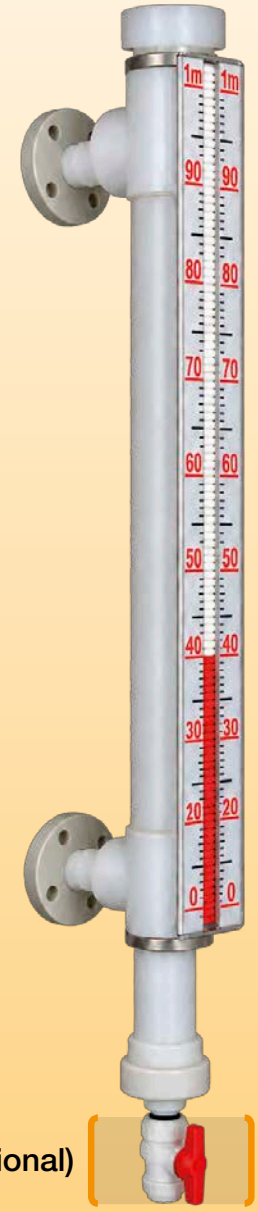

(optional)

- Measuring length: single-part max. 6500 mm optional two-part or multipart
- p_{max}: 6 bar; t_{max}: -10 ... +80°C (PP) -20 ... +120 (PVDF)
- Viscosity: max. 200 mm²/s
- Connection: EN flange DN 20 ... 50 ANSI flange ¾" ... 2" G and NPT threads
- Material: PP, PVDF
- Limit contacts
- Analogue output, HART®
- Resistant to acids and alkali



NBK-RS

N2

KOBOLD companies worldwide:

AUSTRALIA, AUSTRIA, BELGIUM, BULGARIA, CANADA, CHINA, CZECHIA, FRANCE, GERMANY, GREAT BRITAIN, HUNGARY, INDIA, INDONESIA, ITALY, MALAYSIA, MEXICO, NETHERLANDS, PERU, POLAND, REPUBLIC OF KOREA, SPAIN, SWITZERLAND, THAILAND, TUNISIA, TURKEY, USA, VIETNAM

KOBOLD Messring GmbH
Nordring 22-24
D-65719 Hofheim/Ts.
Head Office:
+49(0)6192 299-0
+49(0)6192 23398
info.de@kobold.com
www.kobold.com

Description

Kobold plastic level indicators are used for continuous measurement, display and monitoring of liquid levels. The bypass tube is attached sideways to the wall of the vessel. According to the law of communicating tubes the level in the bypass tube equals the level in the vessel. A float with embedded circular magnets in the bypass tube follows the liquid level and transfers it in a non-contacting manner to a display fitted outside the tube or to a monitoring device. The following indication and monitoring devices are available:

Magnetic roller indicator

As the float passes by, the red/ white rollers are rotated in succession by 180° around their own axes. The rollers change from white to red as the level rises and from red to white as the level falls. The level is continuously displayed as a red column, even when the power fails.

Transmitter

To remotely transmit the level a transmitter with a chain of resistors can be mounted outside the bypass tube. A continuous standard signal of 4 ... 20 mA is generated by means of a fitted transmitter. This standard signal can then be displayed with analogue or digital indicating devices.

Limit contacts

One or more reed contacts for limit-value acquisition or also for level control can be secured to the bypass tube.

Applications

- Storage tanks
- Aggressive media
- Mixing vessels
- Water tank

Technical Details

Process connection:	EN 1092-1 loose flange DN 20 ... DN 50, PN 10 ANSI loose flange ¾"- 2", 150 lbs, ½, ¾, 1, 1 ¼" G or NPT
Vent / Drain plug:	G½ (DIN EN flanges) ½" NPT (ASME flanges)
Bypass tube:	Ø 63 mm
Material:	PP, PVDF
Operating pressure:	PN 6
Operating temperature:	PP: -10 ... +80 °C PVDF -20 ... +120 °C
Max. meas. length:	to 6500 mm single-part, optional two parts or multipart
Min. density:	600 kg/m^3
Viscosity:	max. 200 mm^2/s standard
Overall length:	depending on measuring length, see dimension drawing
Installation position:	vertical

Roller display indication:

Carrier frame material:	aluminium
Material roller:	PBT red/white
Front cover:	PMMA
Medium temperature:	-20 ... +120 °C
Ambient temperature:	-10 ... +80 °C
Protection:	IP54 (option IP65)

Limit contact, model NBK-R

Contact operation:	Bistable changeover contact
Switching hysteresis:	approx. 15 mm
Max. switching capacity:	60W/VA, 230 $V_{AC/DC}$, 1A
Resistance:	100 mΩ
Medium temperature:	-20 ... +100 °C
Ambient temperature:	-20 ... +75 °C
Connection:	3 m PVC-cable
Housing:	polycarbonate
Protection:	IP67

Limit contact, model NBK-RS

Contact operation:	Bistable changeover contact
Switching hysteresis:	approx. 15 mm
Max. switching capacity:	60W/VA, 230 $V_{AC/DC}$, 1A
Resistance:	100 mΩ
Medium temperature:	-20 ... +120 °C
Ambient temperature:	-20 ... +100 °C
Cable connection:	silicone cable, colour coded 4Gx1 mm^2
Cable gland:	M16x1,5 brass
Housing:	stainless steel 1.4301
Protection:	IP67

No responsibility taken for errors;
subject to change without prior notice.

1/11 - 2026

Technical Details additional Features (continued)

Reed contact resistor chain model ...W:

Total resistance:	0,7 ... 7 kΩ
Meas. Circuit voltage:	max. 24 V_{DC}
Measuring current:	max. 0,1 A
Medium temperature:	-20 ... +120 °C
Ambient temperature:	-20 ... +80 °C
Resolution:	10 mm
Housing:	aluminium pressure-cast
Protection:	IP 65

Reed contact resistor chain with 2-wire transmitter model ...M:

Output:	4 ... 20 mA
Supply voltage:	16... 32 V_{DC}
Load resistance:	(V_{supply}-9 V)/0,02 A(Ω)
Medium temperature:	-20 ... +120 °C
Ambient temperature:	-20 ... +80 °C
Resolution:	10 mm
Housing:	aluminium pressure-cast
Protection:	IP 65

Reed contact resistor chain with 2-wire transmitter: 4 ... 20 mA (codes F, O, V, X)

Common specifications:	
Power supply:	8.0 ... 35 V_{DC}
Communication interface:	Loop Link
Current output:	
Signal range:	4 ... 20 mA
Load resistance:	(V_{supply}-8 V)/0.023 A(Ω)
Sensor error detection:	
Programmable:	3.5 ... 23 mA
NAMUR NE43	23 mA/3.5 mA
Upscale/Downscale	
Medium temperature:	-20 ... +120 °C
Ambient temperature:	-20 ... +80 °C
Resolution:	10 mm
Housing:	aluminium (code F) st. st. 1.4404 (codes O, V, X)
Cable entry:	M20x1,5 (options F, O) M16x1,5 (option V)
Electrical Connection:	M12 (option X)
Protection:	IP 66

Reed contact resistor chain with 2-wire transmitter: 4 ... 20 mA HART® (codes G, Q)

Power supply:	8.0 ... 30 V_{DC}
Communication interface:	Loop Link
Current output:	
Signal range:	4 ... 20 mA
Load resistance:	(V_{supply}-8 V)/0.023 A(Ω)
HART protocol rev.:	HART 7 and HART 5
Sensor error detection:	
Programmable:	3.5 ... 23 mA
NAMUR NE43	23 mA/3.5 mA
Upscale/Downscale	
Medium temperature:	-20 ... +120 °C
Ambient temperature:	-20 ... +80 °C
Resolution:	10 mm
Housing:	aluminium (code G) st. st. 1.4404 (code Q)
Cable entry:	M20 x 1.5
Protection:	IP 66

Reed contact resistor chain with 2-wire transmitter: 4 ... 20 mA HART®, LCD display, optical buttons (code Z)

Power supply:	10 ... 35 V_{DC}
Communication interface:	Loop Link
Current output:	
Signal range:	4 ... 20 mA
Load resistance :	(V_{supply}-10 V)/0.023 A(Ω)
Load resistance with backlight:	(V_{supply}-12 V)/0.023 A(Ω)
Backlight:	Selectable ON/OFF
Backlight color:	Selectable white or red
HART protocol rev.:	HART 7 and HART 5
Sensor error detection:	
Programmable:	3.5 ... 23 mA (23 mA factory default)
NAMUR NE43	23 mA/3.5 mA
Upscale/Downscale	
Medium temperature:	-20 ... +120 °C
Ambient temperature:	-20 ... +80 °C
Resolution:	10 mm
Housing:	aluminium
Cable entry:	M20 x 1.5
Protection:	IP 66

No responsibility taken for errors;
subject to change without prior notice.

Options

Code	Description	Sketch/pictures
V0	Without vent plug	
K2	Vent valve, ½" NPT female	
K3	Vent valve, G½ female	
	Bottom bypass tube connections	
D0	Without drain plug	
B2	Drain valve, ½" NPT female	
B3	Vent valve, G½ female	
	Electrical outputs	
U	Option with connection box at bottom, for easy access to connection box	see sketch
I	Option with straight connection	See sketch
R	Option "Z" with remote mounting for wall mounting or 2" pipe mounting including 2" pipe mounting kit (delivered unassembled) Only available in combination with models W, C, H.	See sketch

No responsibility taken for errors;
subject to change without prior notice.

1/11 - 2026

Options

Code	Description	Sketch/picture
	Additional options	
A	Connection threaded for 2-part version	See sketch
HL	Retaining piece/support tee with G1 female thread (for DIN EN flanges) or 1" NPT female (for ASME flanges)	See sketch
	Scales	
PS	Scale in %	See sketch
IP	IP degree IP65	
	Test Certificates	
P	Calibration test 5 points	
X	Pressure test with water 1.5 x PN	
Z	2.1 Inspection certificate acc. EN 10204	
SF	Oil and fat free	

Sketches of selected options

Option A
Connection threaded for 2-part version

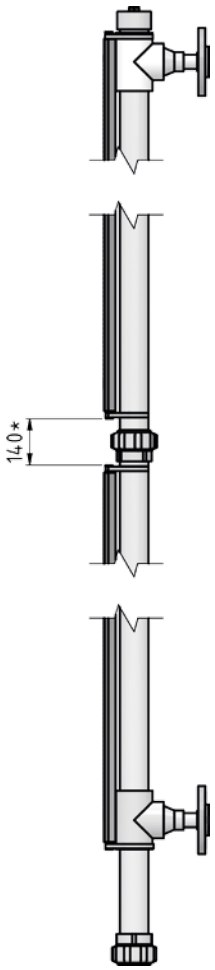

Option HL
Retaining piece

Support tee with 1"female thread (BSPP or NPT)
Recommended use every two metres

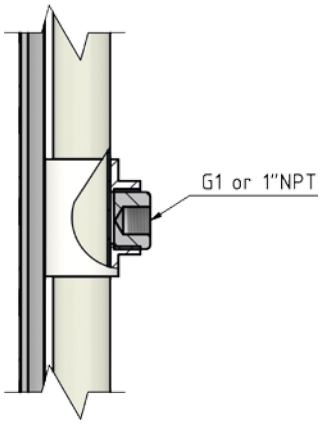

Option PS
Scale in %

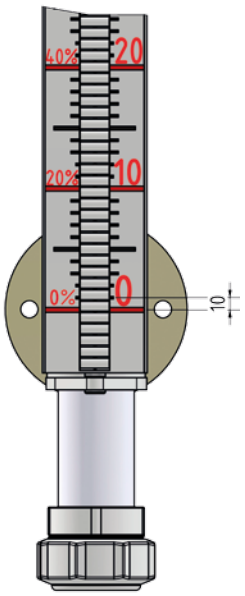

No responsibility taken for errors;
subject to change without prior notice.

Order Details (Example: **MBK-16 F 20 00 0 1 0**)

Model[1]	Connection[2]	Nominal size	Roller indication	Sensor/Transmitter	Media density / Float[3] [kg/m³]	Options
MBK-16 **PP** **MBK-17** **PVDF**	**F** = DIN flange **A** = ANSI flange **F** = DIN flange **A** = ANSI flange **R** = G female thread **N** = NPT female thread **Y** = special	**20** = DN 20, ¾" **25** = DN 25, 1" **32** = DN 32, 1¼" **40** = DN 40, 1½" **50** = DN 50, 2" **Y** = special	**00** = without **RP** = PBT rollers	**0** = without **W** = Potentiometer aluminium head **M** = 4 ... 20 mA 2-wire aluminium head **C** = Potentiometer screw-cap aluminium **F** = 4 ... 20 mA screw-cap aluminium **G** = same as option "F" + HART® **H** = Potentiometer screw-cap st. st. 1.4404 **O** = 4 ... 20 mA screw-cap st. st. 1.4404 **Q** = same as option "O" + HART® **V** = 4 ... 20 mA Connector EN 175301-803 Form A, st. st. 1.4404 **X** = 4 ... 20 mA, connector M12, st. st. 1.4404 **Z** = 4 ... 20 mA HART®, LCD display, aluminium **Y** = special	**1** = Normal density 1.4 kg/dm³ Min. density 1.3 kg/dm³ **2** = Normal density 1.2 kg/dm³ Min. density 1.1 kg/dm³ **3** = Normal density 1 kg/dm³ Min. density 0.9 kg/dm³ **4** = Normal density 0.8 kg/dm³ Min. density 0.73 kg/dm³ **5** = Normal density 0.7 kg/dm³ Min. density 0.65 kg/dm³ **6** = Normal density 0.6 kg/dm³ Min. density 0.57 kg/dm³	**0** = without options or options as in list and description (see separate options list) **Y** = special option
NBK-R	Standard limit contact (bistable changeover contact)					
NBK-RS01U03	Limit contact, bistable, change-over, max. 120°C, 3m silicone cable					
NBK-RS01U06	Limit contact, bistable, change-over, max. 120°C, 6m silicone cable					
NBK-RS01U10	Limit contact, bistable, change-over, max. 120°C, 10m silicone cable					

[1] Please specify in writing: measuring length 'ML', medium density, operating pressure (max. 6 bar) and operating temperature
[2] Flange connection pressure rating standard is PN10.
[3] Tared /balanced float according to media density is optional available at extra charge. Float tare must be specified. Standard is without tare. Any deviation between media density and floats nominal density causes an additional error in measurement.
Without float tare the minimum float density is stated on the instrument label.

Measuring length ML, density and temperature please specify in clear text

Classification acc. To PED 2014/68/EU: Art. 4.3 – SEP

No responsibility taken for errors;
subject to change without prior notice.

1/11 - 2026

Dimensions [mm]

MBK-16/17 with roller display

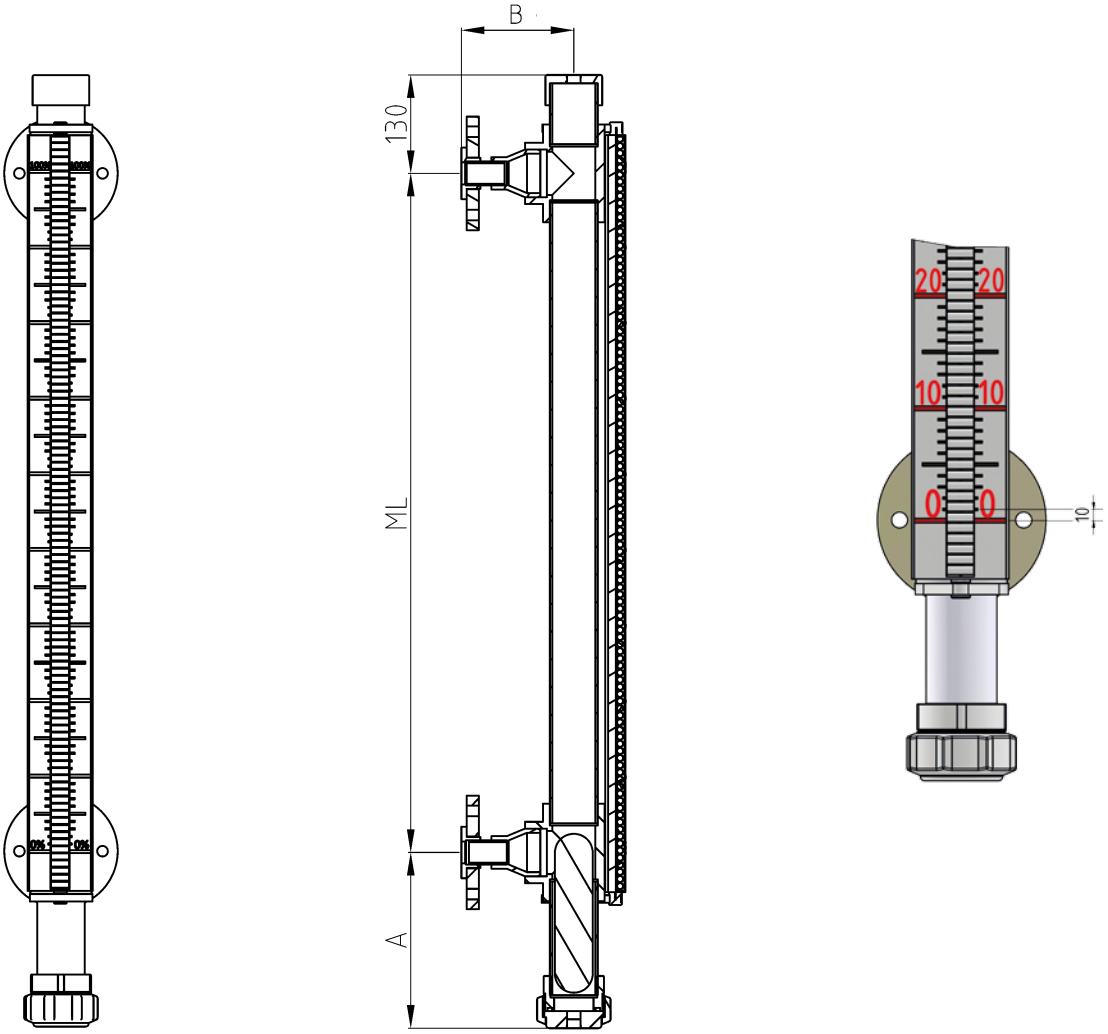

Dimension A [mm]

Model	Material	Min. Medium densities							
		600 kg/m³	700 kg/m³	800 kg/m³	900 kg/m³	1000 kg/m³	1200 kg/m³	1400 kg/m³	1600 kg/m³
MBK-16	PP	480	380	330	290	250	230	230	230
MBK-17	PVDF	730	500	395	335	295	245	220	220

Dimension B [mm]

Model	Flanged process connection [mm]	Threaded process connection [mm]
MBK-16/17	150	170

No responsibility taken for errors;
subject to change without prior notice.

Dimensions [mm] (continuation)

Bypass Float

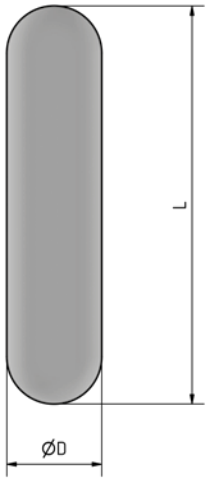

Dimensions

Model	Diameter D [mm]	Length L [mm]	Material
1 (1400 kg / m³)	50	150	PP
		40	PVDF
2 1200 kg / m³)	50	150	PP
		165	PVDF
3 (1000 kg / m³)	50	170	PP
		215	PVDF
4 (800 kg / m³)	50	250	PP
		315	PVDF
5 (700 kg / m³)	50	300	PP
		420	PVDF
6 (600 kg / m³)	50	400	PP
		650	PVDF
Interface float	50	Min. density difference = 150 kg/m³	PP
			PVDF

MBK-... with transmitter

Sensor/Transmitter Option C/F/G

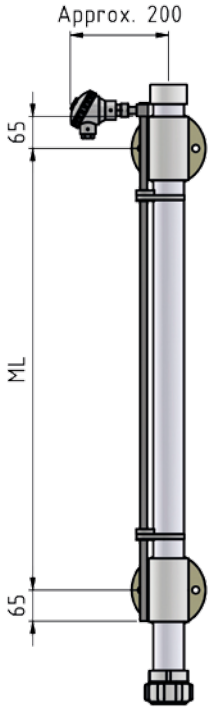

Sensor/Transmitter Option H/O/Q

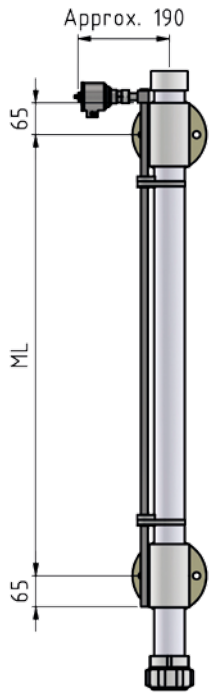

Sensor/Transmitter Option M/W

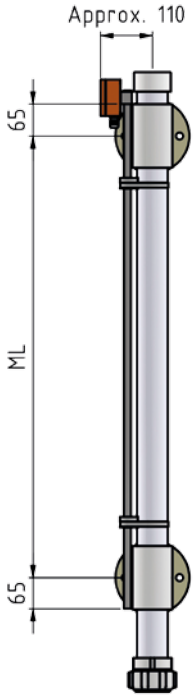

Sensor/Transmitter Option Z

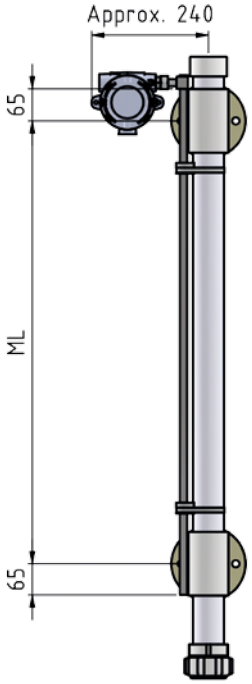

No responsibility taken for errors;
subject to change without prior notice.

1/11 - 2026

Sensor/Transmitter
Option V

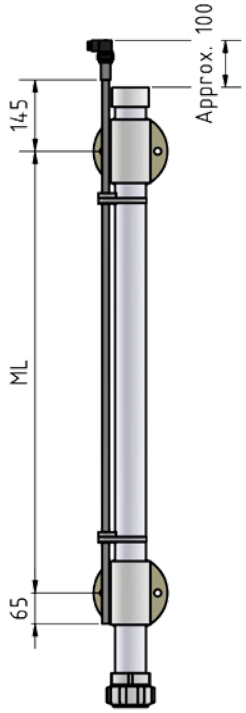

Sensor/Transmitter
Option X

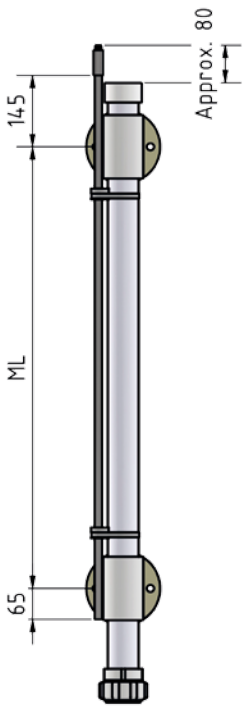

Option U

Option with connection box at bottom, for easy access to connection box

Sensor/Transmitter
Option C/F/G

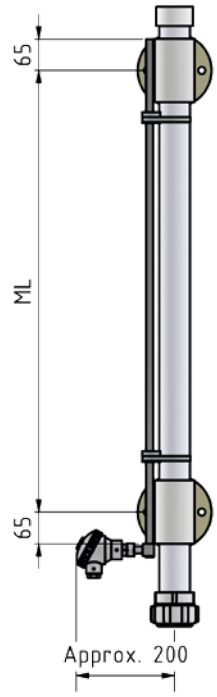

Sensor/Transmitter
Option H/O/Q

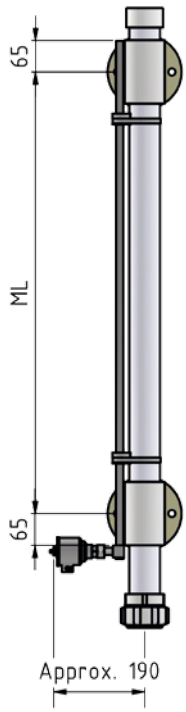

Sensor/Transmitter
Option M/W

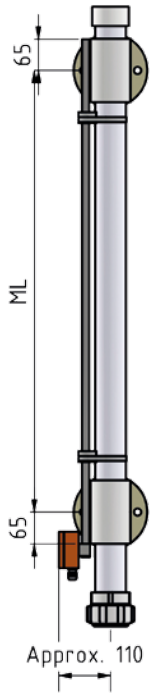

Sensor/Transmitter
Option Z

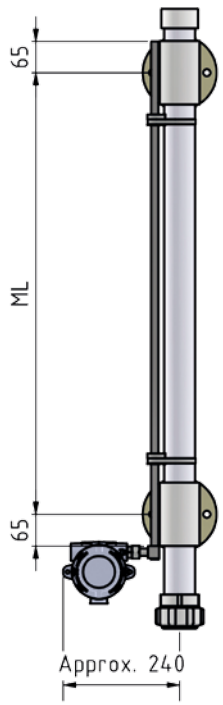

No responsibility taken for errors;
subject to change without prior notice.

Option I

Option with straight connection

Sensor/Transmitter Option C/F/G

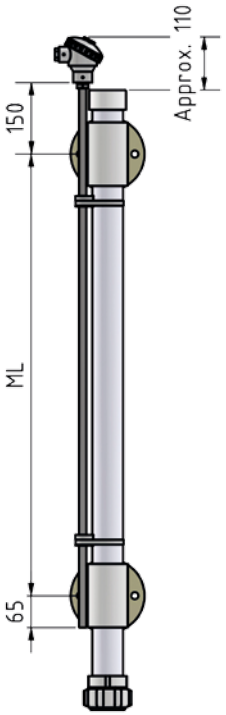

Sensor/Transmitter Option H/O/Q

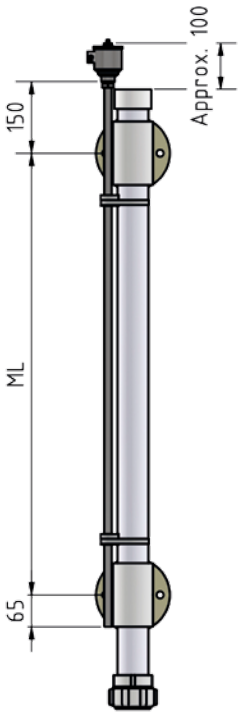

Sensor/Transmitter Option Z

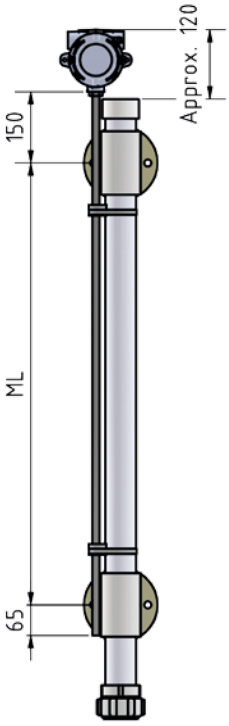

Option R

Wall mounting / bracket 2"

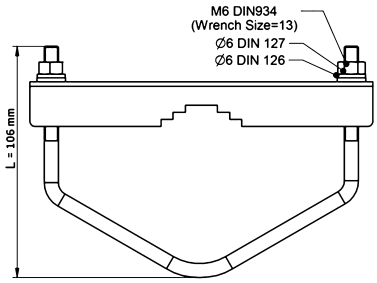

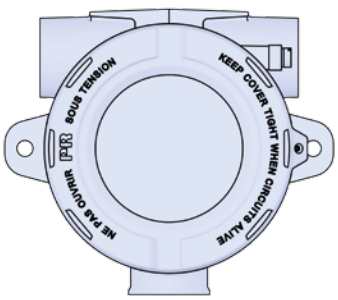

NBK-R

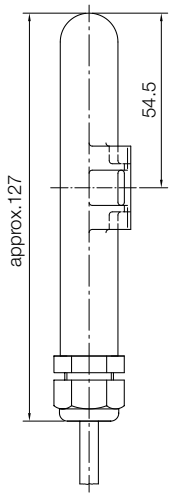

NBK-RS

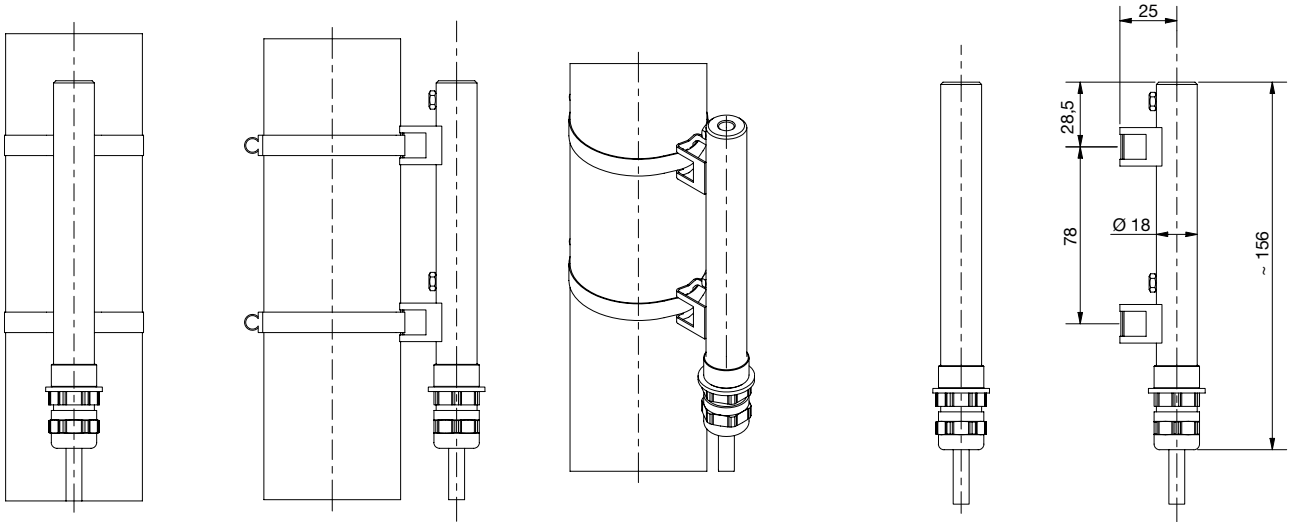

No responsibility taken for errors;
subject to change without prior notice.