Operating Instructions

for

Dosing Electronic

Model: ZED-D

or DF-…DLxxx

or *Model*-…GxxR

1. Contents

1. Contents 2
2. Note 3
3. Instrument Inspection 3
4. Regulation Use 3
5. Operating Principle 4
6. Electrical Connection 5
   - 6.1 ZED-D, DRB-…GxxR, DPE-…GxxR fieldhousing and control panel installation 5
   - 6.2 DF-…DLxxx, Model-…GxxR cable connection 5
   - 6.3 Model-…GxxR plug connection 6
   - 6.4 Connection example 6
7. Operation / Configuration / Adjustments 10
   - 7.1 General 10
   - 7.2 Function of the control keys 11
   - 7.3 Character explanation for main menu 12
   - 7.4 General Settings 13
   - 7.5 Flow and analogue output 15
   - 7.6 Relay output 17
   - 7.7 Dosing 19
   - 7.8 User alignment and Service-Settings 21
   - 7.9 Error report 24
8. Relay Functions 25
   - 8.1 Dosing (REL S1) with correction amount & fine dosing (REL 2) 25
   - 8.2 Dosing (REL S2) & Pump control (REL S1) 26
   - 8.3 Switching characteristic limit value 27
   - 8.4 Switching characteristic window 27
9. Technical Information 28
10. Order Codes 28
11. Dimensions 28
12. Disposal 29
13. EU Declaration of Conformance 30
14. UK Declaration of Conformity 31

Manufactured and sold by:

Kobold Messring GmbH
Nordring 22-24
D-65719 Hofheim
Tel.: +49(0)6192-2990
Fax: +49(0)6192-23398
E-Mail: info.de@kobold.com
Internet: www.kobold.com

2. Note

Please read these operating instructions before unpacking and putting the unit into operation. Follow the instructions precisely as described herein.
The instruction manuals on our website www.kobold.com are always for currently manufactured version of our products. Due to technical changes, the instruction manuals available online may not always correspond to the product version you have purchased. If you need an instruction manual that corresponds to the purchased product version, you can request it from us free of charge by email (info.de@kobold.com) in PDF format, specifying the relevant invoice number and serial number. If you wish, the operating instructions can also be sent to you by post in paper form against an applicable postage fee.

Operating instructions, data sheet, approvals and further information via the QR code on the device or via www.kobold.com

The devices are only to be used, maintained and serviced by persons familiar with these operating instructions and in accordance with local regulations applying to Health & Safety and prevention of accidents.

When used in machines, the measuring unit should be used only when the machines fulfil the EC-machine guidelines.

3. Instrument Inspection

Instruments are inspected before shipping and sent out in perfect condition.
Should damage to a device be visible, we recommend a thorough inspection of the delivery packaging. In case of damage, please inform your parcel service / forwarding agent immediately, since they are responsible for damages during transit.

Scope of delivery:
The standard delivery includes:
- Dosing Electronic model: ZED-D

4. Regulation Use

Any use of the Dosing Electronic, model: ZED-D, which exceeds the manufacturer’s specification, may invalidate its warranty. Therefore, any resulting damage is not the responsibility of the manufacturer. The user assumes all risk for such usage.

5. Operating Principle

The evaluation unit changes the frequency signal of the pickup into a 3(4)-digit flow reading with adjustable scale (topline of display), and a scalable analogue signal. The dosage is displayed in the bottom line of the display. The unit of measurement can be selected.

Included are two relays with floated output changeover contacts for various functions. The relay (S1) can be used to execute the flow monitoring, total volume monitoring, fine dosage or the pump control.

When the flow is being continuously monitored, it checks if the freely adjustable limits are exceeded or fallen short of. A choice can be made between threshold value and window monitoring. Switching point, hysteresis, window point, and switch-on or switch-off delay can be set as desired. If monitoring of the total volume is selected, a check is made to see if the adjustable quantity limit is exceeded.

The dosage relay (S2) switches on when the dosage process starts, and then switches off again, once the dosage has flowed through. The dosage process can be interrupted by using the Start/Stop switch. By taking a correction quantity into account, it is possible to take any special features or conditions of the system into account. By entering a fine dosage, the bypass valve can be controlled with the relay (S1). A red LED indicates the relay's switching status.

The Analogue output is available as a current output with 0(4)...20 mA or a voltage output with 0...10 V. The parameter names in the menu can be displayed in either German or English. If used where the flow readings change rapidly, the display can be pacified and the analogue reading averaged by switching on some software. If the maximum set flow (exceeded range) is exceeded, it will be shown on the display. The set parameters can be protected against unauthorised alteration using a password function.

Range of functions

Dosage and flow meter with digital display, switch and analogue output:

- Measurement and display of dosage, total and flow Quantities
- Free scaling using Teach-In or input of frequency and measured value
- Interval counter (number of dosing processes)
- 2 control inputs
- 1 dosage output
- 1 switching output, freely programmable as flow monitor
  or for monitoring the total quantity
- Analogue output 0(4)-20 mA or 0-10 V

6. Electrical Connection

6.1 ZED-D, DRB-…GxxR, DPE-…GxxR fieldhousing and control panel installation

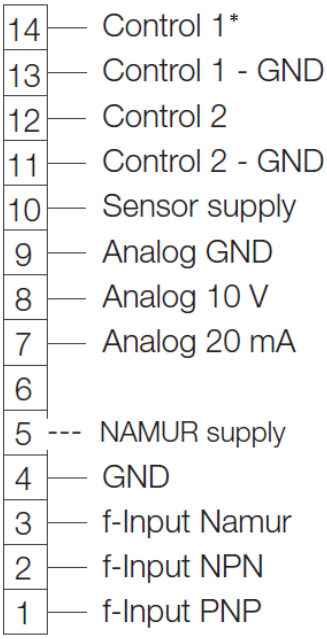

*) Ctrl 1 -- GND => Start
Ctrl 2 -- GND => Stop
Ctrl 1 -- Ctrl 2 -- GND => Reset Dosing

6.2 DF-…DLxxx, Model-…GxxR cable connection

Wire number	DF Dosing electronics
1	+24 V_{DC}
2	GND
3	4-20 mA / 0-10 V
4	GND
5	Ctrl 1 *)
6	Ctrl 2 *)
7	Relay S1 N/O
8	Relay S1 COM
9	Relay S2 N/O
10	Relay S2 COM

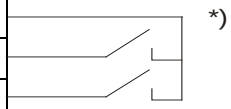

*) Ctrl 1 -- GND => Start
Ctrl 2 -- GND => Stop
Ctrl 1 -- Ctrl 2 -- GND => Reset Dosing

6.3 Model-…GxxR plug connection

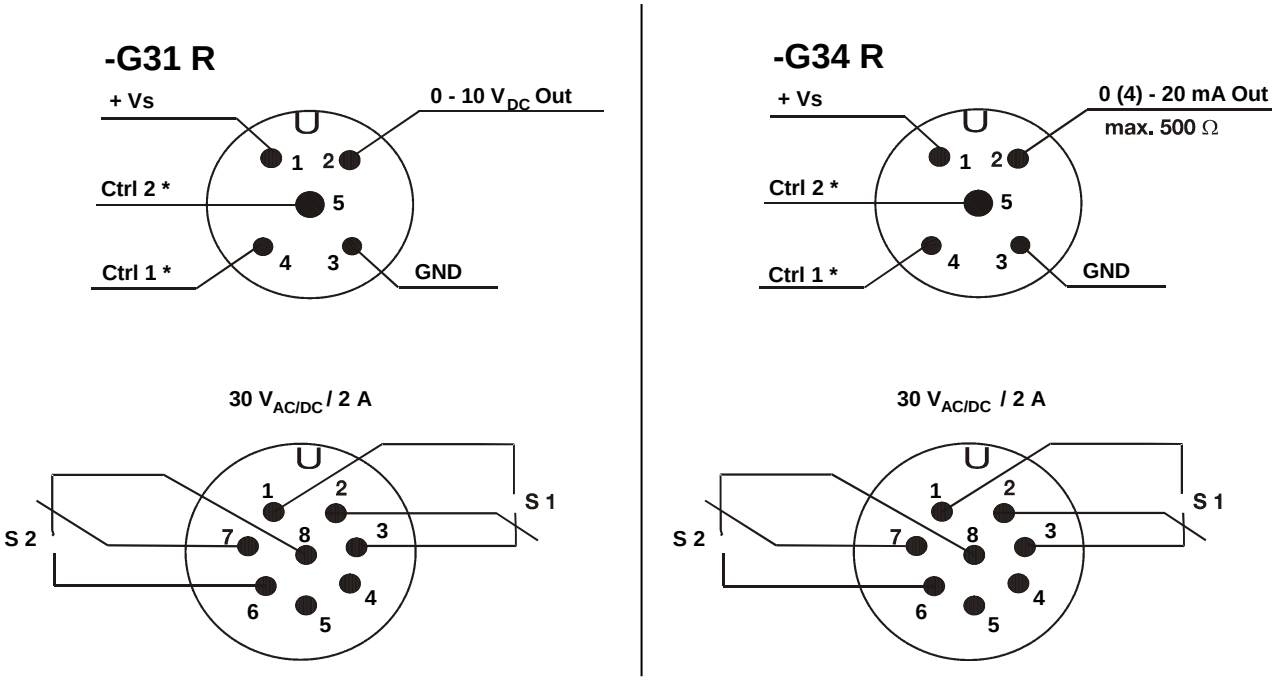

*) Ctrl 1 -- GND => Start
Ctrl 2 -- GND => Stop
Ctrl 1 -- Ctrl 2 -- GND => Reset Dosing

6.4 Connection example

PNP-Sensor

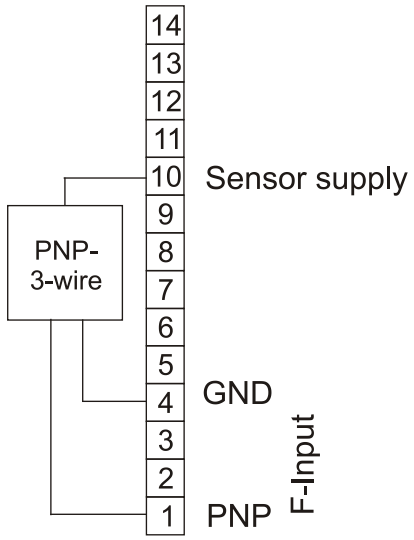

NPN-Sensor

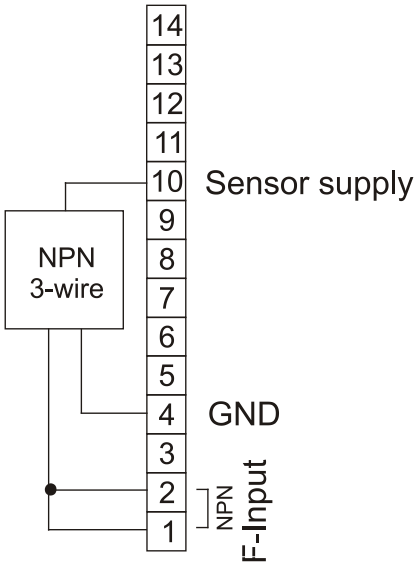

NAMUR-Sensor

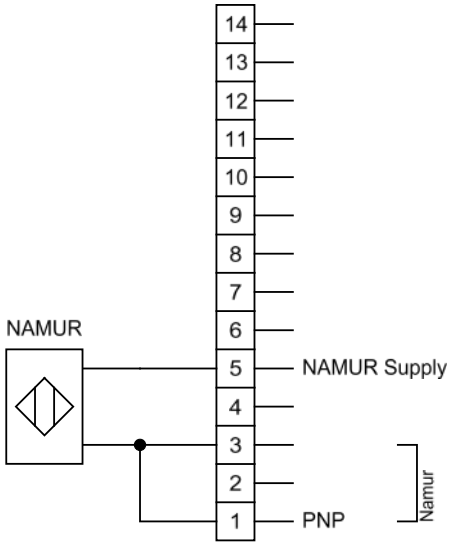

Operation of ZED-D on flow meters with transmitters UMF2B, UMF3 and UMC4 for dosing applications

The ZED-D dosing device is connected to the UMF2B, UMF3 or UMC4 converter via the frequency output.

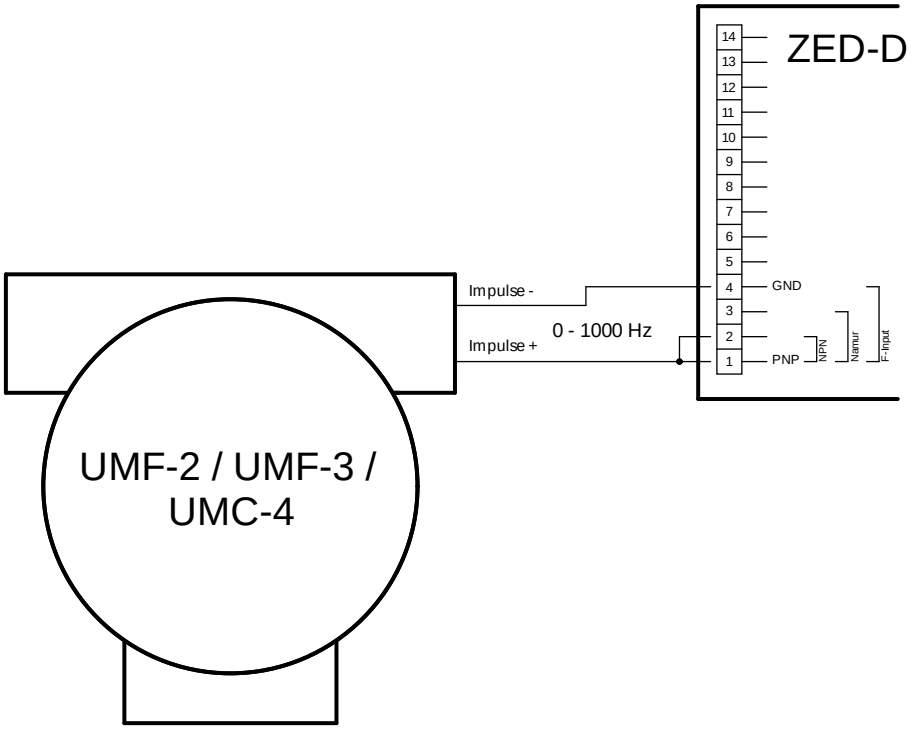

The following parameterizations must be made:

Settings on the UMF2B / UMF3 / UMC4 transmitter (see corresponding operating instructions):

- Enter customer password 0002 (UMF2B, UMF3: Chapter 13.2.1, UMC4: 7.2.2.1).
- In the function class "Pulse output" / "Pulse or frequency output" set the pulse output to frequency output (UMF2B, UMF3: Chapter 13.6.1; UMC4: 7.2.8.1). Select the unit l/min (UMC4: kg/min) in the function class "Flow" / "Flow unit". Any other unit can be selected. When calculating K0 later in the ZOK, however, it must first be converted to l/min. - Read out the end value in l/min (kg/min) in the function class "Flow" / "Flow end value". If the flow rate is the same as the final value, the converter outputs 1000 Hz.
- With short filling times, the smallest possible time constant should be set (UMF2B: Chapter 13.4.1; UMF3: Chapter 13.4.2; UMC4: 7.2.4.1).
- The filter is switched off (UMC4: "weak") (UMF2B: Chapter 13.4.5; UMF3: Chapter 13.4.1; UMC4: 7.2.4.5). In this way, the measured value can follow a change in flow rate as quickly as possible. This makes the flow rate indication in the display more restless, but this is not relevant for the accuracy of the dosing.
- The low flow rate should be set to a small value, e.g. 1%, so that no pulses are counted when the medium is standing still (UMF2B: Chapter 13.4.2; UMF3: Chapter 13.4.3; UMC4: 7.2.4.2).

Settings on the ZED-D:

See chapter 7.8

FlowVal = End value of the UMFx in l/min (or kg/min)
FlowUnit = l/min
Freq.Val = 1000 Hz

Function check:

Activate the simulation for the frequency output on the UMF2B, UMF3 or UMC4 converter:
- Select function class "Simulation" / "Simulation specification Q / direct" => "Direct".
- Set the frequency to 1000 Hz under "Simulation direct pulse output".
- Switch on the simulation under "Simulation off / on"

The ZED-D must now display a flow rate that is equal to the final value of the UMF2B (UMF3, UMC4)

Please note:
If the end value is exceeded, there is a risk that at a frequency above 1100 Hz, the frequency transmission between the converter and ZED-D will no longer function properly and pulses will be lost. Please also observe the display of the UMF2 (UMF3, UMC4) during a sample filling, whether an error "Pulse output overdriven" or "Current overdriven" is reported. In this case, the final value in UMF2 (UMF3, UMC4) must be adapted and the FlowVal parameter recalculated in the ZED-D. The measuring range of the UMF2B (UMF3, UMC4) should be adapted to the maximum expected flow rate in order to make good use of the frequency range of 1000Hz. If, for example, the maximum flow rate is 30 l / min, the end value should be set to e.g. 33 l/min (10% reserve) to allow the end value to be exceeded slightly.

7. Operation / Configuration / Adjustments

7.1 General

Only the menu items which lines are marked in the selection matrix in grey colour, are available in the respective instrument version.

***Italic* written values are blinking in the display, if they have been chosen for any input.**

The parameter can only be changed, if the security code has been entered correctly! The message „locked“ will appear if the input has not been activated.

7.2 Function of the control keys

Operating mode >Measure< :

PGM/ENTER

- Press briefly 1x: → a) Display dosage interval counter or
  → b) Reset status reports.

- Press briefly 2x: → Display current total quantity, then
  → Display corresponding scale unit.

- Press for 3 sec: → Switch to operating mode >**Parameterize**<

▼ + ▲

- Press for 3 sec: → Enter dosage
  (only if parameter **DMdirect** is switched to **"yes"**).

START/STOP

- Press briefly: → a) Start dosage process.
  → b) Interrupt dosage process.

- Press for 3 sec: → Initialising and then poss. abortion of dosage operation.

Operating mode >Parameterize< :

PGM/ENTER

- Press briefly: → a) Open parameter group or
  → b) Change parameter (go lower in menu level) or
  → c) Adopt value input.

- Press for 3 sec: → Abort input (ESC) and go back one
  menu level.

▼

- Press briefly: → a) Select parameter group or parameter or
→ b) Reduce digit position (when entering of numerical value) or
→ c) Select list value (e.g. ... L/m, L/h, m^3/m, ...).

▲

- Press briefly: → a) Select parameter group or parameter or
→ b) Increase digit position (when entering of numerical value) or
→ c) Select list value (e.g. ... m^3/m, L/h, L/m, ...).

START/STOP

- No function in >**Parameterize**< operating mode.

Note: If no button is pressed for 20 seconds during parameterising, the instrument automatically switches back into >measuring< mode.

7.3 Character explanation for main menu

(**e**) - Button **PGM/ENTER** press shortly.
(**E**) - Button **PGM/ENTER** press and hold for approx. 3 seconds.
(▼) - Button ▼ press shortly.
(▲) - Button ▲ press shortly.

7.4 General Settings

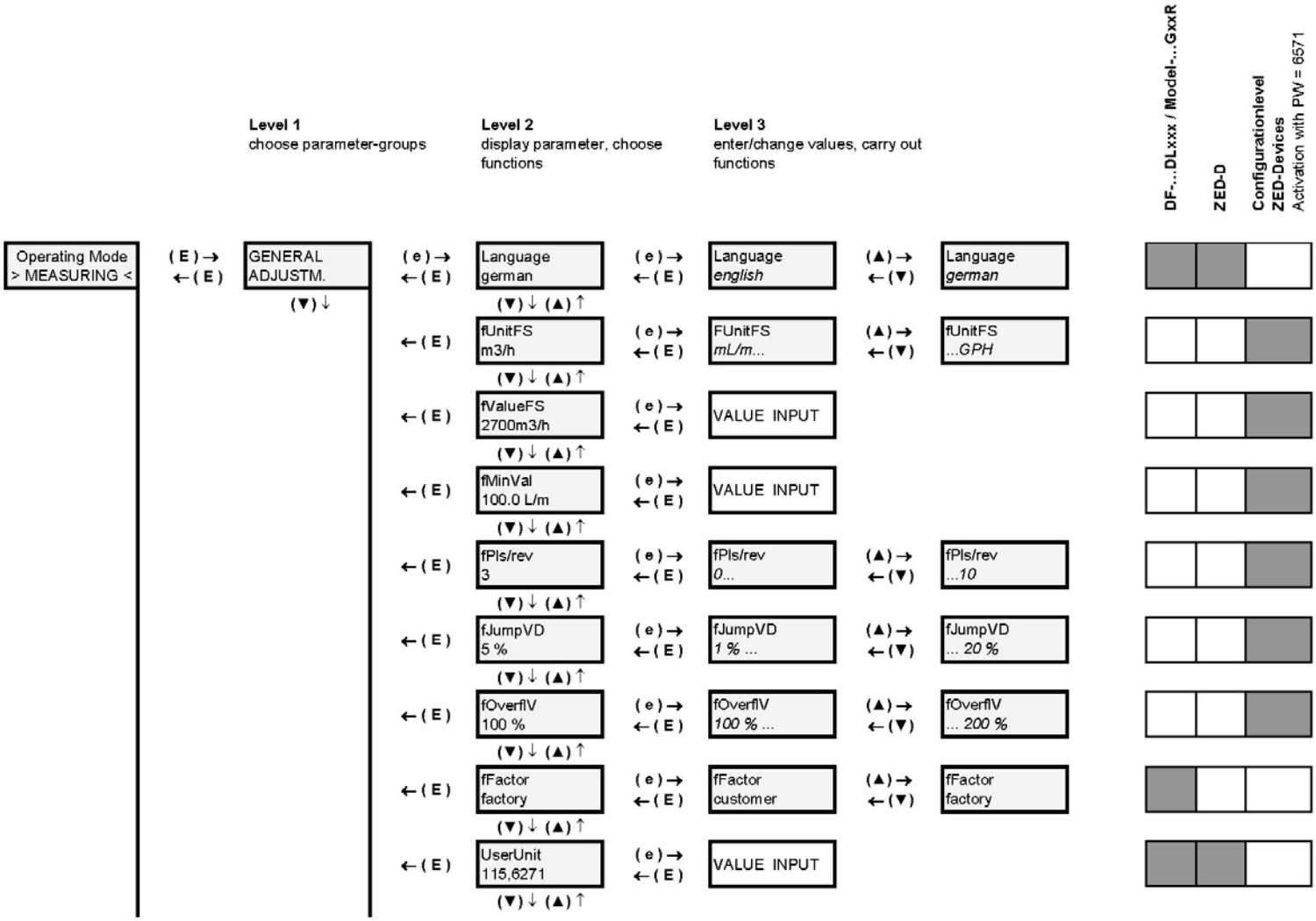

GENERAL SETTINGS		
Menu Item	**Parameter / Function**	**Explanation / Values / Other**
Language	Select menu language	German or English
fUnitFS *	Measuring unit for flow measurement	mL/s, mL/m, L/s, L/m, L/h, m^3/m, m^3/h, GPM, GPH, UU/s, UU/m, UU/h
fValueFS *	Maximum measuring range value for flow measurement	Range = 0,00...99,9..._100...9999
fMinVal *	Minimum measuring range value for flow measurement	Basis is fValueFS and fUnitFS If the level drops below this, the flow indicator goes to 0.
fPls/rev*	Impulse per sensor wheel revolution	Number of impulses per revolution of the sensor wheel or the like Necessary for long-term period averaging if the readings per revolution vary. The function is switched off when the input value is 1.
fJumpVD *	Flow switch value for attenuation cut-off	Value in %, basis is fValueFS and fUnitFS. Attenuation does not function if the switch value is 0%.
fOverflV	Flow overflow value (overflow)	Value in %, basis is fValueFS and fUnitFS. If exceeded, an M100 report is generated and faded in, alternating with the flow indicator. The report is saved and can be reset by briefly pressing the PGM key.
fFactor	Select pulse ration	Selection of works calibration or user calibration. (only for devices Model DF-...DLxxx and Model-...GxxR)
UserUnit.	Special volume unit	Customer-specific special unit UU. The value entered corresponds to the number of litres of the special unit, e.g. in the case of the unit *Barrel* the factor would for example be 115.6271.

*) Only for ZED devices: Device-specific parameter, is only visible after activation in the **SecCode** menu item in the **SERVICE** menu group, and can be changed.

7.5 Flow and analogue output

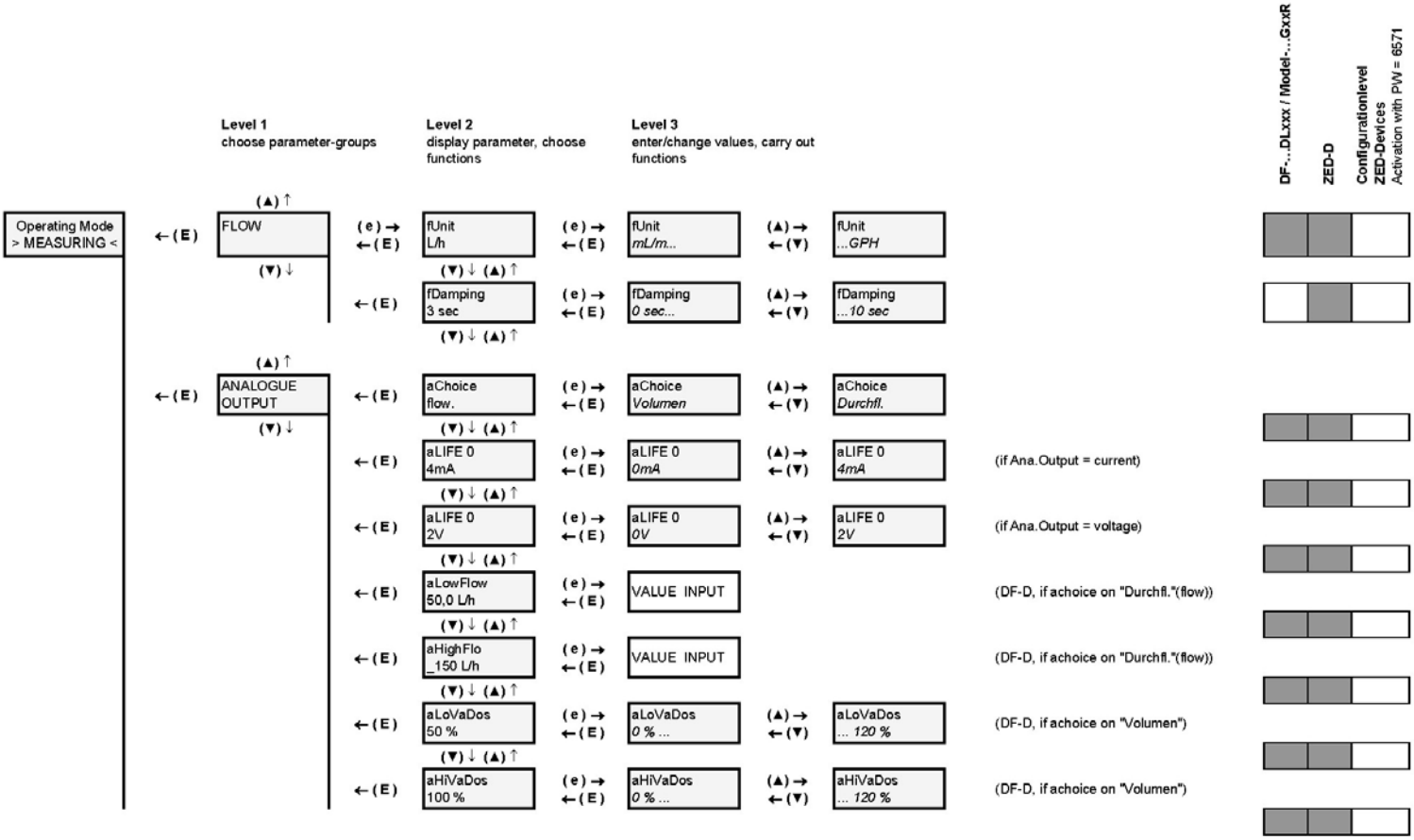

FLOW		
Menu Item	**Parameter / Function**	**Explanation / Values / Other**
fUnit	Unit of flow indicator	mL/s, mL/m, L/s, L/m, L/h, m^3/m, m^3/h, GPM, GPH, UU/s, UU/m, UU/h
fDamping	Attenuation of reading fluctuations in the flow indicator	The attenuation pacifies the flow indicator. The attenuation value is the approximate equivalent of the setting time of the display value to c. 90 % of a measured value jump in seconds. (Parameter is blocked at DF-...DLxxx devices).

ANALOGUE OUTPUT		
Menu Item	**Parameter / Function**	**Explanation / Values / Other**
aChoice	Selection of analogue source	Flow: gauged analogue value of flow measurement Volume: current volume in percentage of dosage
aLIFE 0	Select Life Zero	Offset at power output: 0 mA or 4 mA at 0-10 V ≙ 0 mA → 0 V and 4 mA → 2 V
aLowFlow	Flow reading at 0/4 mA or 0/2 V	Lower flow reading of gauged output range, value has the same unit as the flow indicator, (only if **aChoice** is set to **Flow**)
aHighFlo	Flow reading at 20 mA or 10 V	Upper flow reading of gauged output range, value has the same unit as the flow indicator, (only if **aChoice** is set to **Flow**)
aLoVaDos	Percentage the dosage at 0/4 mA or 0/2 V	Lower volume value of gauged output range. - Range: 0...120 % - The difference |aHiVaDos – aLoVaDos| may not be less than 10 %. - aLoVaDos > aHiVaDos is also possible. (only if **aChoice** is set to **Volume**)
aHiVaDos	Percentage the dosage at 20 mA or 10 V	Upper volume reading of gauged output range. - Range: 0...120 % - The difference |aHiVaDos – aLoVaDos| may not be less than 10 %. - aLoVaDos > aHiVaDos is also possible. (only if **aChoice** is set to **Volume**)

7.6 Relay output

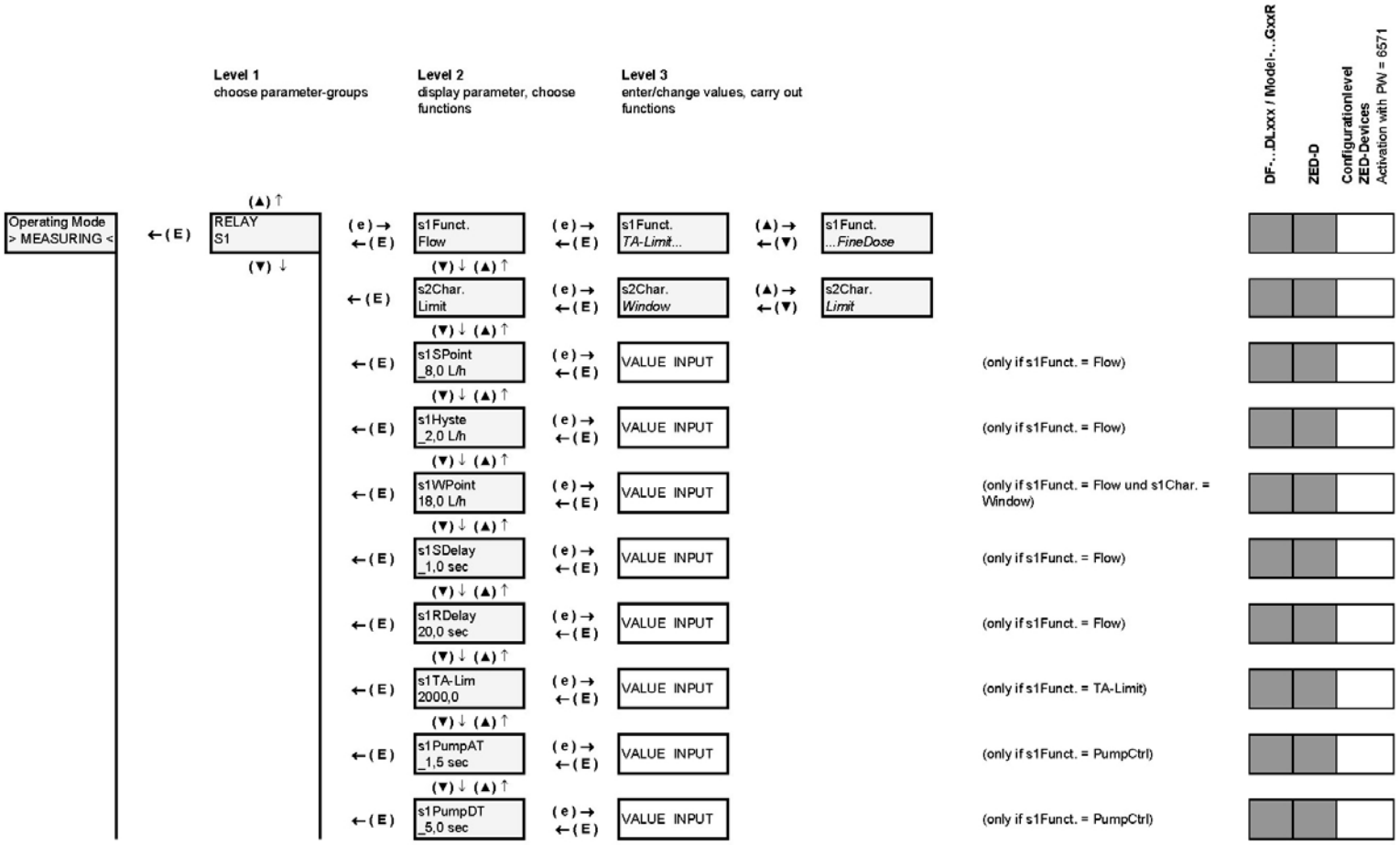

RELAY S1		
Menu Item	**Parameter / Function**	**Explanation / Values / Other**
s1Funct	Relay1 Function selection	Flow: Monitoring of an adjustable flow value (s1SPunkt). GM Limit: Monitoring of an adjustable total volume (s1TA-Lim). PumpCtrl: Dosage pump control. FineDose: Fine dosage valve control. see → 8.0 Relay functions
s1Char.	Relay1 Switch characteristic	Limit: Monitoring a reading (s1Spunkt). Window: Monitoring an adjustable measuring range (s1Spunkt...s1WPoint). (only if **s1Funct.** is set to **Flow**)
s1SPunkt	Relay1 Switchpoint	Reading is in the same units as the flow indicator. (only if **s1Funct.** is set to **Flow**)
s1Hyste	Relay1 Hysteresis	Reading is in the same units as the flow indicator. (only if **s1Funct.** is set to **Flow**)
s1WPoint	Relay1 Windowpoint	Reading is in the same units as the flow indicator. (only if **s1Funct.** is set to **Flow** und **s1Char.** auf **Window**)
s1SDelay.	Relay1 Switch delay	Value input is always in the following format Range: _0,0...99,9 sec (only if **s1Funct.** is set to **Flow**)
s1RDelay.	Relay1 Reset delay	Value input is always in the following format Range: _0.0...99.9 sec (only if **s1Funct.** is set to **Flow**)
s1TA-Lim	Relay1 Total volume limit value	Reading is in the same units as the total volume unit in dosage unit menu group. (only if **s1Funct.** Is set to **GM Limit**)
s1PumpAT	Relay1 Pump control lead time	Reading determines pump lead time (Rel 1) before dosage begins Range = _0.0...99.9 sec (only if **s1Funct.** is set to **PumpCtrl**) see → 8.2 Pump control
s1PumpDT	Relay1 Pump control coast down time	Reading determines pump coast down time (Rel 1) after end of dosage Range = _0,0...99.9 sec (only if **s1Funct.** is set to **PumpCtrl**) see → 8.2 Pump control

7.7 Dosing

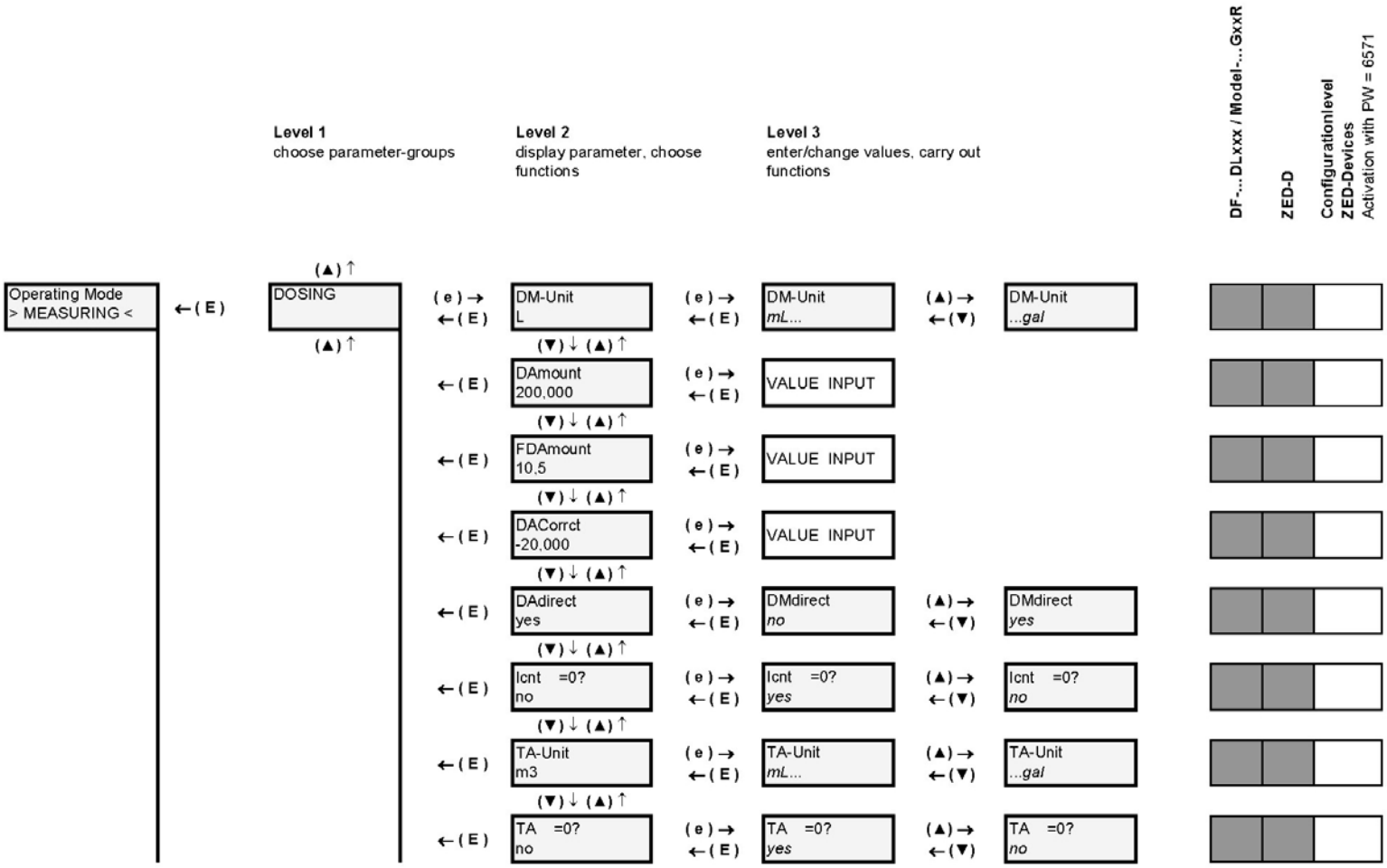
Level 1
choose parameter-groups
Level 2
display parameter, choose functions
Level 3
enter/change values, carry out functions
DF-...DLxxx / Model-...GxxR
ZED-D
Configurationlevel ZED-Devices
Activation with PW = 6571
Operating Mode
> MEASURING <
(E)
(▲)
DOSING
(e)
(E)
DM-Unit
L
DM-Unit
mL...
(▲)
(▼)
DM-Unit
...gal
(▼)
(▲)
DAmount
200,000
VALUE INPUT
FDAmount
10,5
VALUE INPUT
DACorrct
-20,000
VALUE INPUT
DAdirect
yes
DMdirect
no
DMdirect
yes
Icnt =0?
no
Icnt =0?
yes
Icnt =0?
no
TA-Unit
m3
TA-Unit
mL...
TA-Unit
...gal
TA =0?
no
TA =0?
yes
TA =0?
no

DOSAGE UNIT		
Menu Item	**Parameter / Function**	**Explanation / Values / Other**
DM-Unit	Unit of dosage	Unit of dosage quantity mL, L, m^3, gal, mgal, UU (User Unit, see → **UserUnit.**)
DAmount	Dose	Numerical value of dosage quantity
FDAmount	Fine dose	Numerical value of the fine dosage Unit set as in **DM-Unit**. For activating of fine dosage, the function Fine dose must be setted in the menu group RELAYS1, under the menu item S1FUNKT. (Function see → 8.1 Dosage)
DACorrct	Correction quantity	Numerical value of correction quantity Unit set as in **DM-Unit**. A negative reading causes the dosage relay S2 to switch off before the zero reading on the dosage meter is reached. Any coast-down quantity needed can be corrected with this entry. A positive reading causes the dosage to be increased by the appropriate constant amount. The dosage relay S2 only switches the dosage meter off once the reading has exceeded the 0 value. Any quantity lacking can be corrected with this entry. (Function see → 8.1 Dosage)
DMdirect	Dosage – direct input	Activation of direct dosage via the (E), (+)- und (–)- keys, without having to go into the menu. Start of input by simultaneously pressing of (> 3sec) the (+)- and the (–)- keys. Unit set as in **DM-Unit**. yes: Direct input of the dosage activated by keys (default). no: Input of dosage only possible in the menu.
ICNT =0?	Set interval counter to 0	The interval counter only counts dosage processes that have been carried out completely. yes: Interval counter = 0 no: no action
TA-Unit	Total quantity display Unit	Total quantity display unit mL, L, m^3, gal, mgal, UU (User Unit, see → **UserUnit.**)
TA =0?	Set total quantity display to 0	The total quantity meter counts the total flow quantity (also the non-dosed flow). yes: Total quantity meter = 0 no: No action

7.8 User alignment and Service-Settings

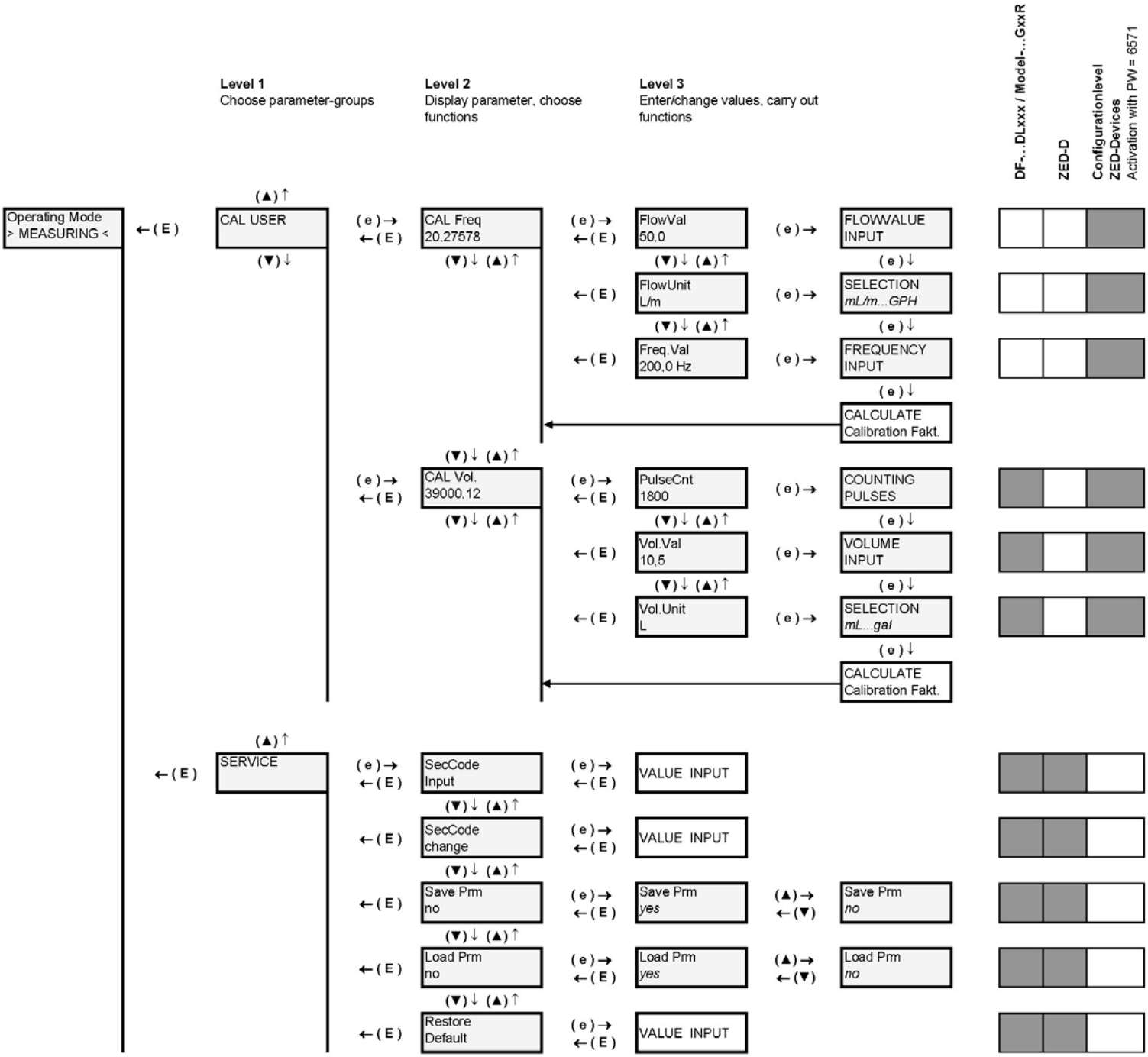

USER CALIBRATION	
Menu Item	**Function / Explanation**
CAL Freq*	Calibrate by entering frequency and flow. In the menu item **CAL Freq** The bottom line always shows the current pulse value of the User calibration. Calibration process: a) **FlowVal** Enter nominal flow value of the sensor. > (e) press > b) **FlowUnit** Enter unit for flow value. > (e) press > c) **Freq.Val** Enter nominal frequency > finish with (e). The new pulse value of the User calibration. is calculated from the three values and saved as user calibration for the flow measurement. e.g. 20.2757 pls/litre.
CAL Vol.	Calibration process using impulse counting and volume input (cc procedure). In the menu item **CAL Vol.** The bottom line always shows the current pulse value of the User calibration.. Calibration process: a) **PulseCnt** measures number of impulses (e) press > start counter (impulses are counted) > (e) press > stops counter. b) **Vol.Val** Enter measured volume value > (e) press. c) **Vol.Unit** Enter unit for volume value > finish with (e). The pulse value of the User calibration.is calculated from the three values and is saved as the user calibration for the flow measurement. e.g. 3900,5 pls./L.

*) CAL Freq – Only possible with ZED devices.

Note: With ZED devices it is necessary to enable the device-specific parameter input in the menu Item SecCode in the menu SERVICE in order to activate the CAL USER function.

Note: If the new pulse ratio will be used for measurement, then the menu item fFaktor in the menu group General Settings must be setted to USER calibration.

SERVICE		
Menu Item	**Parameter / Function**	**Explanation / Values / Other**
SecCode Input	Enter security code.	Input of 4-digit security code and enablement of the parameter change. The following passwords have been defined: 3461 – General menu release 6571 – Activates the device-specific parameters (only ZED devices)
SecCode change	Change security code	Define or change security code for the first time or change. If no code (= 0000) has been set, then the parameter values set are unsecured!
Save Prm	Save parameter record	Save current settings
Load Prm	Load parameter record	Restore saved settings (reload).
Restore Default	Reset to works default settings	Load initial setting with password 2541. The function is blocked when the sensor has been factory-calibrated (only ZED devices).

7.9 Error report

Error code	Reason	Reset
E102	UU User unit may not be ≤ 0	Correct parameter
E142	Distance between upper and lower analogue value too small (based on the actual flow)	Correct parameter
E143	Distance between upper and lower analogue value too small (based on the dosing amount)	Correct parameter
E 161	Value is greater than maximum measuring range value.	Correct parameter
E162	Hysteresis too large	Correct parameter
E 163	Window point is lower than switching point.	Correct parameter
E 222	If correction quantity is negative than the dose is lesser/equal to fine dose + correction quantity.	Correct parameter
E 223	If correction quantity is positive than the dose is greater/equal to fine dose + correction quantity.	Correct parameter
E242	Frequency must be between 0,2 and 2000 Hz	Correct parameter
E245	Calculated pulse value out of valid range	Correct parameter
E300	Error memory value of totalising/part counter	Keep ▲ + ▼ pressed about 20 seconds
M100	Overflow (M103 has priority)	Acknowledge with PGM button
M103	Overflow while dosing	Acknowledge with PGM button
####	Value does not fit in the display	Choose suitable measuring unit

8. Relay Functions

8.1 Dosing (REL S1) with correction amount & fine dosing (REL 2)

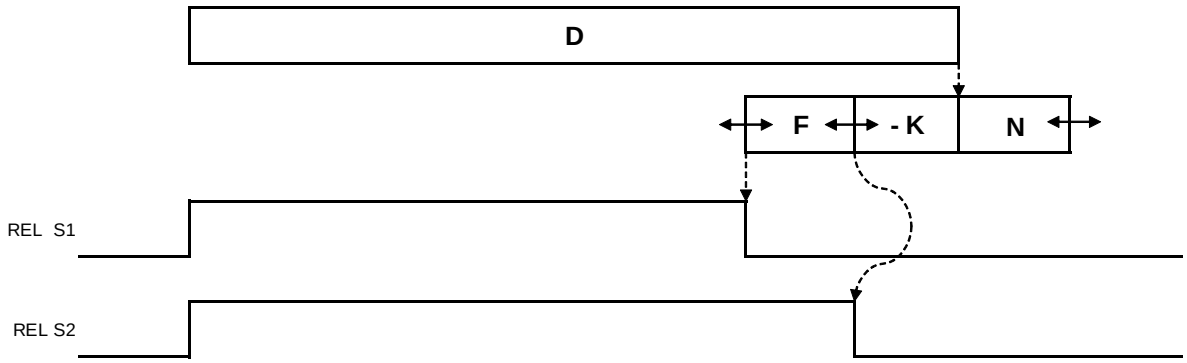

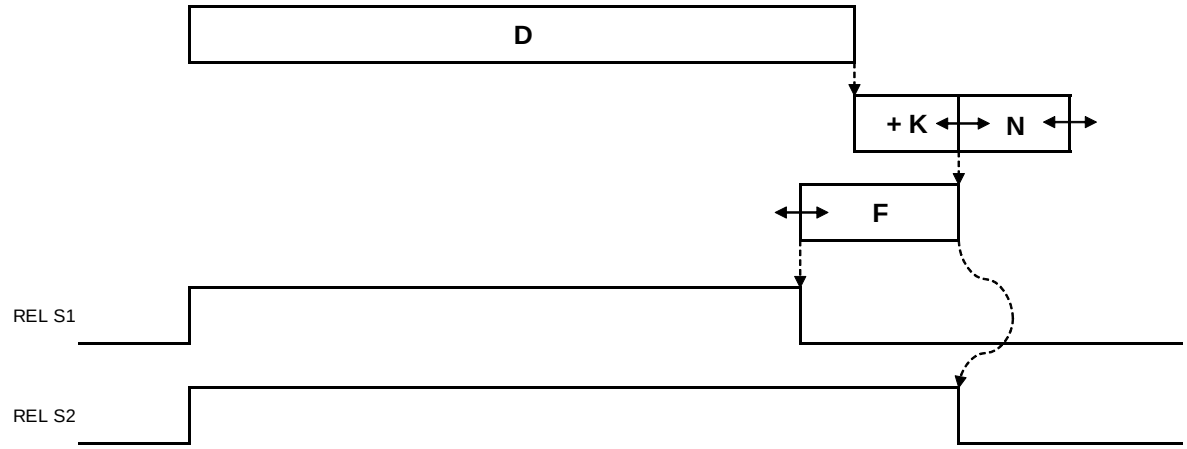

D -	DAmount	dosing amount
F -	FDAmount	fine dosing amount
-K -	DMCorrct	correction amount (if negative)
+K -	DACorrct	correction amount (if positive)
N -		follow-up amount

8.2 Dosing (REL S2) & Pump control (REL S1)

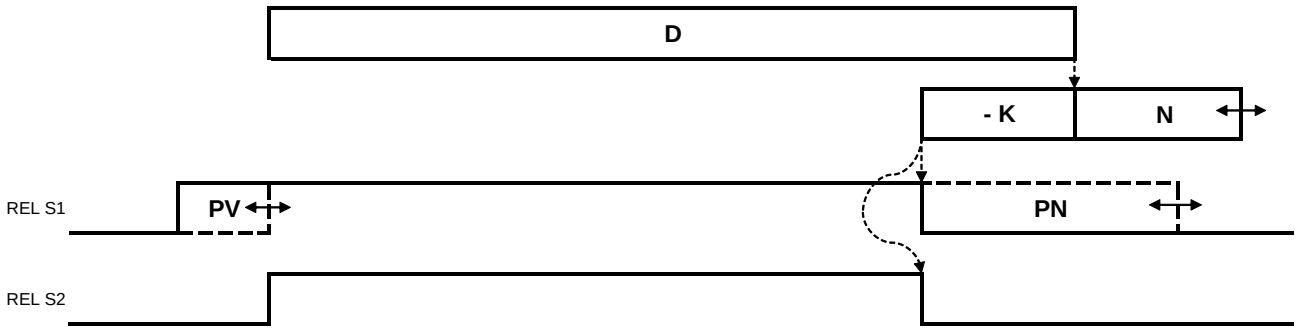

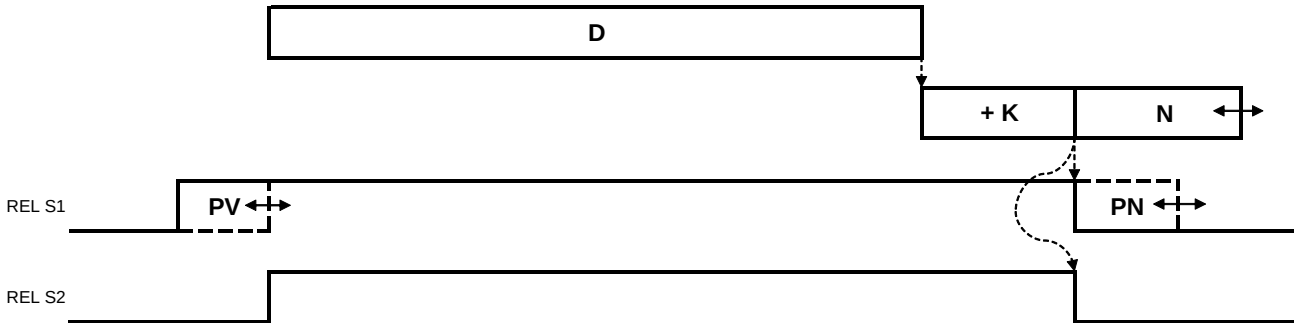

D -	DAmount	dosing amount
-K -	DACorrct	correction amount (if negative)
+K -	DACorrct	correction amount (if positive)
PV -	s1PumpAT	pump flow
PN -	s1PumpDT	pump backlash
N -		follow-up amount

8.3 Switching characteristic limit value

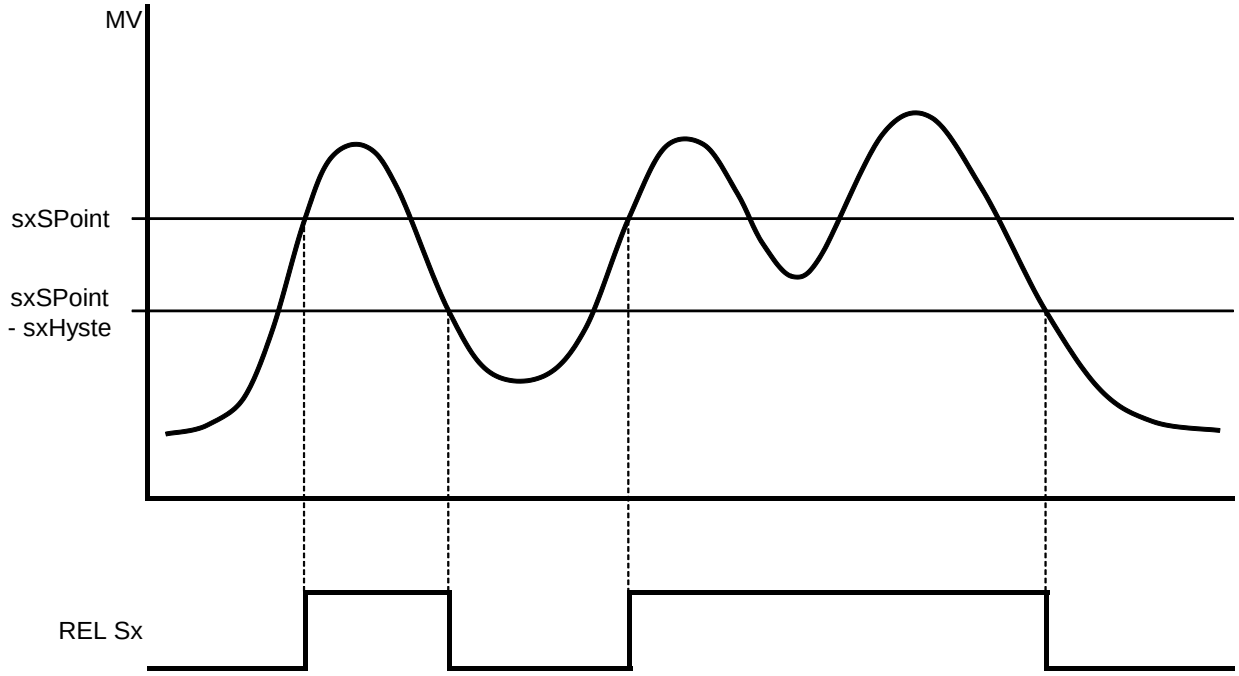

8.4 Switching characteristic window

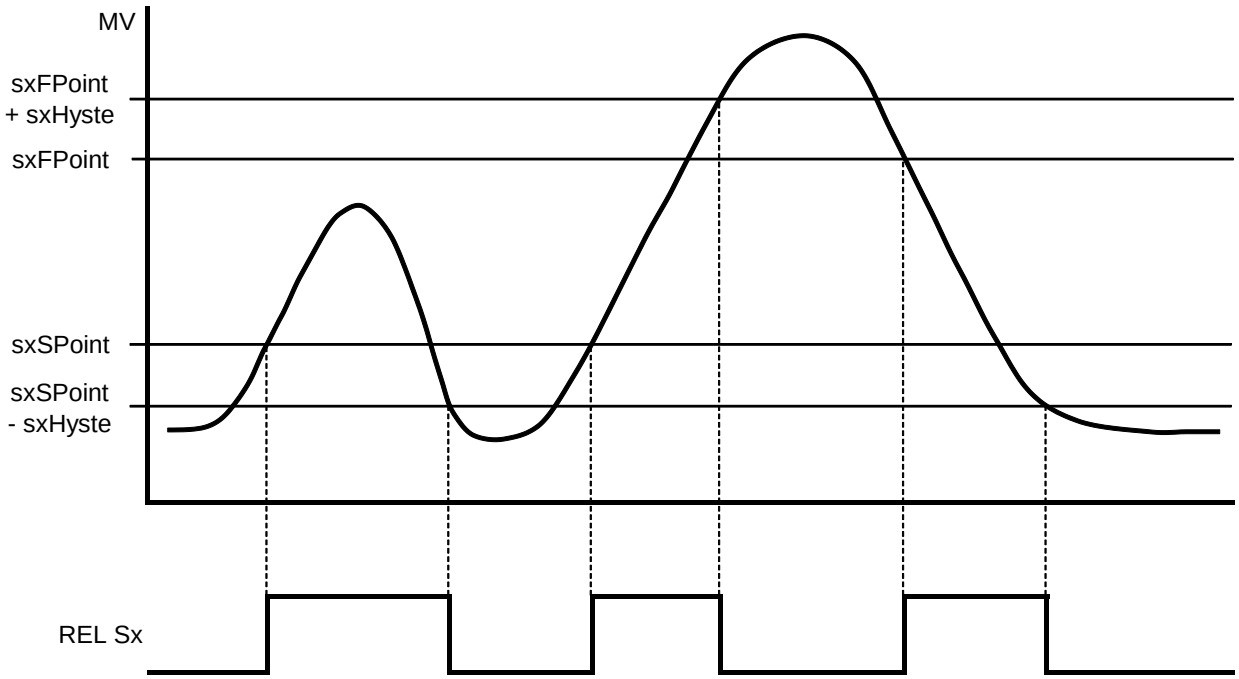

9. Technical Information

Operating instructions, data sheet, approvals and further information via the QR code on the device or via www.kobold.com

10. Order Codes

Operating instructions, data sheet, approvals and further information via the QR code on the device or via www.kobold.com

11. Dimensions

Operating instructions, data sheet, approvals and further information via the QR code on the device or via www.kobold.com

12. Disposal

Note!

- Avoid environmental damage caused by media-contaminated parts
- Dispose of the device and packaging in an environmentally friendly manner
- Comply with applicable national and international disposal regulations and environmental regulations.

Batteries

Batteries containing pollutants are marked with a sign consisting of a crossed-out garbage can and the chemical symbol (Cd, Hg, Li or Pb) of the heavy metal that is decisive for the classification as containing pollutants:

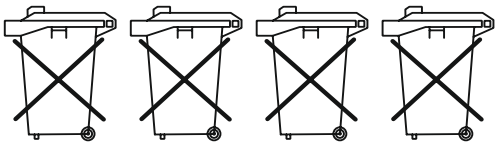

Cd[1] Hg[2] Pb[3] Li[4]

1. „Cd" stands for cadmium
2. „Hg" stands for mercury
3. „Pb" stands for lead
4. „Li" stands for lithium

Electrical and electronic equipment

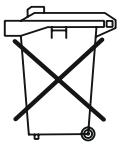

13. EU Declaration of Conformance

We, KOBOLD Messring GmbH, Hofheim-Ts, Germany, declare under our sole responsibility that the product:

Dosing Electronic Model: ZED-D

to which this declaration relates is in conformity with the standards noted below:

EN IEC 61326-1:2021
Electrical equipment for control and instrumentation technology and laboratory use – EMC-requirements, industrial area (measurement of interference immunity to HF fields up to 1 GHz)

EN 61010-1:2010 + A1:2019 + A1:2019/AC:2019
Safety requirements for electrical measuring-, control- and laboratory instruments.

EN 60529:2014
Protection type housing (IP-Code)

EN IEC 63000:2018 Technical documentation for the assessment of electrical and electronic products with respect to the restriction of hazardous substances

Also, the following EC guidelines are fulfilled:

2014/30/EU	**EMC Directive**
2014/35/EU	**Low Voltage Directive**
2011/65/EU	**RoHS**
2015/863/EU	Delegated Directive (RoHS III)

Hofheim, 04 May 2023

H. Volz
General Manager

M. Wenzel
Proxy Holder

14. UK Declaration of Conformity

We, KOBOLD Messring GmbH, Hofheim-Ts, Germany, declare under our sole responsibility that the product:

Dosing Electronic Model: ZED-D

to which this declaration relates is in conformity with the standards noted below:

BS EN IEC 61326-1:2021
Electrical equipment for measurement, control and laboratory use. EMC requirements. General requirements, industrial area (measurement of interference immunity to HF fields up to 1 GHz)

BS EN 61010-1:2010+A1:2019
Safety requirements for electrical equipment for measurement, control, and laboratory use. General requirements

BS EN 60529:1992+A2:2013
Degrees of protection provided by enclosures (IP-Code)

BS EN IEC 63000:2018
Technical documentation for the assessment of electrical and electronic products with respect to the restriction of hazardous substances.

Also, the following UK guidelines are fulfilled:

S.I. 2016/1091	**Electromagnetic Compatibility Regulations 2016**
S.I. 2016/1101	**Electrical Equipment (Safety) Regulations 2016**
S.I. 2012/3032	The Restriction of the Use of Certain Hazardous Substances in Electrical and Electronic Equipment Regulations 2012

Hofheim, 04 May 2023

H. Volz
General Manager

M. Wenzel
Proxy Holder